USER MANUAL

ENGLISH

V1.0

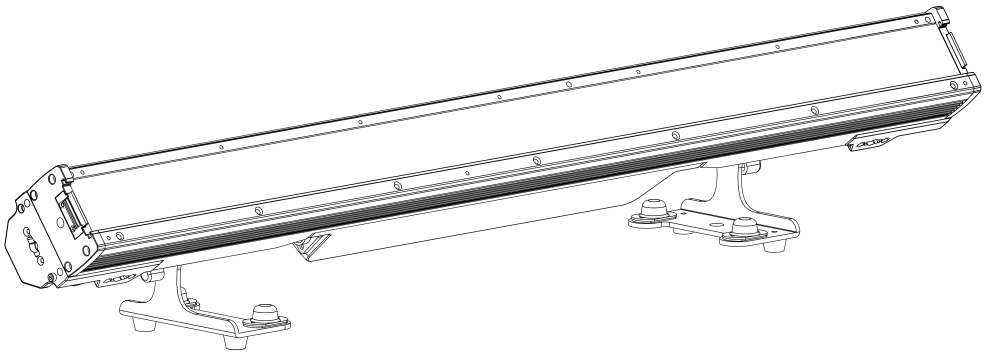

Spectra Strobe

Product code: 42654

Preface

Thank you for purchasing this Showtec product.

The purpose of this user manual is to provide instructions for the correct and safe use of this product.

Keep the user manual for future reference as it is an integral part of the product. The user manual shall be stored at an easily accessible location.

This user manual contains information concerning:

- Safety instructions
- Intended and non-intended use of the device
- Installation and operation of the device
- Maintenance procedures
- Troubleshooting
- Transport, storage and disposal of the device

Non-observance of the instructions in this user manual may result in serious injuries and damage of property.

©2025 Showtec. All rights reserved.

No part of this document may be copied, published or otherwise reproduced without the prior written consent of Highlite International.

Design and product specifications are subject to change without prior notice.

For the latest version of this document or other language versions, please visit our website www.highlite.com or contact us at service@highlite.com.

Highlite International and its authorized service providers are not liable for any injury, damage, direct or indirect loss, consequential or economic loss or any other loss arising from the use of, or inability to use or reliance on the information contained in this document.

Highlite International B.V. – Vestastraat 2 – 6468 EX Kerkrade – the Netherlands

Table of contents

1. Introduction **4**
1.1. Before Using the Product 4
1.2. Intended Use 4
1.3. LEDs Lifespan 4
1.4. Product Lifespan 4
1.5. Text Conventions 4
1.6. Symbols and Signal Words 5
1.7. Symbols on the Information Label 5

2. Safety **6**
2.1. Warnings and Safety Instructions 6
2.2. Requirements for the User 8
2.3. Personal Protective Equipment 8

3. Description of the Device **9**
3.1. Front View 9
3.2. Back View 9
3.3. Product Specifications 10
3.4. Dimensions 11
3.5. Optional Accessories 11

4. Installation **12**
4.1. Safety Instructions for Installation 12
4.2. Personal Protective Equipment 12
4.3. Installation Site Requirements 12
4.4. Rigging 13
4.4.1. Adjusting the Mounting Bracket Position 13
4.4.2. Horizontal Hanging Installation 14
4.4.3. Vertical Hanging Installation (Optional) 17
4.5. Floorstanding Installation (Optional) 19
4.5.1. Vertical Stacking 20
4.6. Angle Adjustment 20
4.7. Barndoor Installation 22
4.8. Beam Shaper Installation 23
4.9. Connecting to Power Supply 24
4.10. Power Linking of Multiple Devices 24

5. Setup **25**
5.1. Warnings and Precautions 25
5.2. Stand-alone Setup 25
5.3. DMX Connection 25
5.3.1. DMX-512 Protocol 25
5.3.2. DMX Cables 26
5.3.3. Master/Slave Setup 26
5.3.4. DMX Linking 27
5.3.5. DMX Addressing 27

6. Operation **28**
6.1. Safety Instructions for Operation 28
6.2. Control Modes 28
6.3. Control Panel 29
6.4. Start-up 29
6.5. Menu Overview 30
6.6. Main Menu Options 31
6.6.1. Mode 31
6.6.1.1. DMX 32
6.6.1.1.1. DMX Address 32
6.6.1.1.2. DMX Mode 32
6.6.1.2. Auto 33
6.6.1.3. Slave 33
6.6.1.4. Manual 33
6.6.2. Settings 34

6.6.2.1. Dim Curve ... 35
6.6.2.2. Dimmer Speed ... 35
6.6.2.3. Disp Key ... 36
6.6.2.4. White Balance ... 36
6.6.3. Info ... 37
6.7. DMX Channels ... 38
6.7.1. White and RGB LEDs per DMX Personality ... 38
6.7.2. Functions per DMX Functionality ... 38
6.7.3. 03 CH (3 Channels), 09 CH (9 Channels) ... 39
6.7.4. 21 CH (21 Channels) ... 39
6.7.5. 35 CH (35 Channels) ... 41
6.7.6. 49 CH (49 Channels) ... 43
6.7.7. 91 CH (91 Channels) ... 45
6.7.8. Color Presets ... 47
6.7.9. Auto Program ... 48
6.8. RDM Information ... 50
6.8.1. RDM Details ... 50
6.8.2. Supported RDM PIDs (Parameter IDs) ... 50

7. Troubleshooting ... 51

8. Maintenance ... 52
8.1. Safety Instructions for Maintenance ... 52
8.2. Preventive Maintenance ... 52
8.2.1. Basic Cleaning Instructions ... 52
8.3. Corrective Maintenance ... 53
8.3.1. Replacing the Fuse ... 53
8.3.2. Draining Condensation Water ... 53

9. Deinstallation, Transportation and Storage ... 54
9.1. Instructions for Deinstallation ... 54
9.2. Instructions for Transportation ... 54
9.3. Storage ... 54

10. Disposal ... 54

11. Approval ... 54

1. Introduction

1.1. Before Using the Product

Important
Read and follow the instructions in this user manual before installing, operating or servicing this product.

The manufacturer will not accept liability for any resulting damages caused by the non-observance of this manual.

After unpacking, check the contents of the box. If any parts are missing or damaged, contact your Highlite International dealer.

Your shipment includes:

- Showtec Spectra Strobe
- Schuko to Power Pro True cable (1,5 m)
- 2 x quick-lock bracket
- User manual

Figure 1

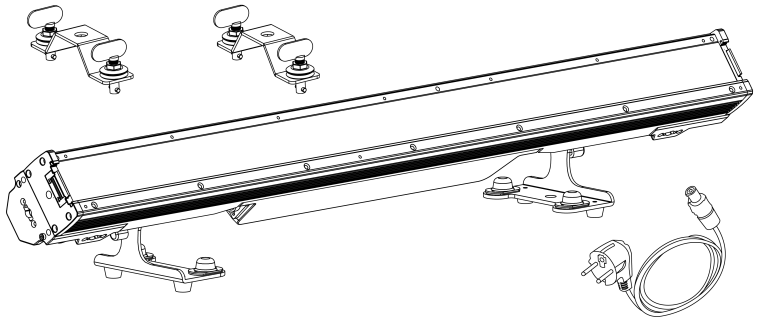

1.2. Intended Use

This device is intended for professional use as a strobe bar. It can be installed indoors and temporarily outdoors. This device is not suitable for households and for general lighting.

Any other use, not mentioned under intended use, is regarded as non-intended and incorrect use.

1.3. LEDs Lifespan

The light output of the LEDs gradually decreases over time (lumen depreciation). High operating temperatures contribute to this process. You can extend the lifespan of the LEDs by providing adequate ventilation and operating the LEDs at the lowest possible brightness.

1.4. Product Lifespan

This device is not designed for permanent operation.

Disconnect the device from the electrical power supply when the device is not in operation. This will reduce the wear and will improve the lifespan of the device.

1.5. Text Conventions

Throughout the user manual the following text conventions are used:

- Buttons: All buttons are in bold lettering, for example "Press the **UP/DOWN** buttons"
- References: References to parts of the device are in bold lettering, for example: "turn the **adjustment handle (05)**". References to chapters are hyperlinked
- 0–255: Defines a range of values
- Notes: **Note:** (in bold lettering) is followed by useful information or tips

1.6. Symbols and Signal Words

Safety notes and warnings are indicated throughout the user manual by safety signs.

Always follow the instructions provided in this user manual.



DANGER Indicates an imminently hazardous situation which, if not avoided, will result in death or serious injury.



WARNING Indicates a potentially hazardous situation which, if not avoided, could result in death or serious injury.



CAUTION Indicates a potentially hazardous situation, which, if not avoided, may result in minor or moderate injury.



Attention Indicates important information for the correct operation and use of the product.



Important Read and observe the instructions in this document.



Electrical hazard



Eye damage hazard



Provides important information about the disposal of this product.

1.7. Symbols on the Information Label

This product is provided with an information label. The information label is located on the back side of the device.

The information label contains the following symbols:



This device shall not be treated as household waste.



Read and follow the instructions in the user manual before installing, operating or servicing the device.



This device falls under IEC protection class I.

IP65 This devices is rated IP65.

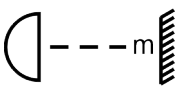

Minimum distance from lighted objects



Warning: Risk of electric shock. Do not open.
Warning: To reduce the risk of fire or electric shock do not expose this equipment to rain or moisture.

2. Safety



Important
Read and follow the instructions in this user manual before installing, operating or servicing this product.

The manufacturer will not accept liability for any resulting damages caused by the non-observance of this manual.

2.1. Warnings and Safety Instructions



DANGER
Danger for children

For adult use only. The device must be installed beyond the reach of children.

- Do not leave any parts of the packaging (plastic bags, polystyrene foam, nails, etc.) within the reach of children. Packaging material is a potential source of danger for children.



DANGER
Electric shock caused by dangerous voltage inside

There are areas inside the device where dangerous touch voltage may be present.

- Do not open the device or remove any covers.
- Do not operate the device if the covers or the housing are open. Before operation, check if the housing is firmly closed and all screws are tightly fastened.
- Disconnect the device from the electrical power supply before service and maintenance, and when the device is not in use.



WARNING
Risk of epileptic shock

Strobe lighting can trigger seizures in photosensitive epilepsy. Sensitive persons should avoid looking at strobe lights.



WARNING
Possible eye damage caused by high light intensity

Possibly hazardous optical radiation emitted from this device.

- Do not look at the operating light source. May be harmful to the eye.
- Do not look at the light source with optical instruments that may concentrate the light output.
- Make sure that persons are not looking directly into the light source when the device lights up suddenly. This can happen when the device is powered on, when it receives a DMX signal, or when certain menu items are selected.
- Disconnect power before servicing.
- Wear protective goggles if looking into the light source during service or maintenance.

Attention
Power supply

- Before connecting the device to the power supply, make sure that the current, voltage and frequency match the input voltage, current and frequency specified on the information label on the device.
- Make sure that the cross-sectional area of the extension cords and power cables is sufficient for the required power consumption of the device.

Attention
General safety

- Do not insert objects into air vents.
- Do not connect the device to a dimmer pack.
- Do not switch the device on and off in short intervals. This reduces the device's life.
- Do not shake the device. Avoid brute force when installing or operating the device.
- Change the lens or the LEDs if they are visibly damaged to such an extent that their effectiveness is impaired, for example by cracks or deep scratches. Contact your Highlite International dealer for more information, as servicing can be performed only by instructed or skilled persons.
- If the device is dropped or struck, disconnect the device from the electrical power supply immediately.
- If the device is exposed to extreme temperature variations (e.g. after transportation), do not switch it on immediately. Let the device reach room temperature before switching it on, otherwise it may be damaged by the formed condensation.
- If the device fails to work properly, discontinue use immediately.

Attention
For professional use only
This device must be used only for the purposes it is designed for.

This device is intended for professional use as a strobe bar. Any incorrect use may lead to hazardous situations and result in injuries and material damage.

- This device is not suitable for households and for general lighting.
- This device is not designed for permanent operation.
- This device does not contain user-serviceable parts. Unauthorized modifications to the device will render the warranty void. Such modifications may result in injuries and material damage.

Attention
Before each use, examine the device visually for any defects.

Make sure that:

- All screws used for installing the device or parts of the device are tightly fastened and are not corroded.
- There are no deformations on housings, fixings and installation points.
- The power cables are not damaged and do not show any material fatigue.

Attention
Do not expose the device to conditions that exceed the rated IP class conditions.

This device is IP65 rated. IP (Ingress Protection) 65 class means that the device is dust-tight and protected against harmful effect of water jets.

Keep the connectors sealed with the rubber caps when the connectors are not in use.

2.2. Requirements for the User

This product may be used by ordinary persons. Maintenance may be carried out by ordinary persons. Installation and service shall be carried out only by instructed or skilled persons. Contact your Highlite International dealer for more information.

Instructed persons have been instructed and trained by a skilled person, or are supervised by a skilled person, for specific tasks and work activities associated with the installation, service and maintenance of this product, so that they can identify risks and take precautions to avoid them.

Skilled persons have training or experience, which enables them to recognize risks and avoid hazards associated with the installation, service and maintenance of this product.

Ordinary persons are all persons other than instructed persons and skilled persons. Ordinary persons include not only users of the product but also any other persons that may have access to the device or who may be in the vicinity of the device.

2.3. Personal Protective Equipment

During installation, deinstallation and rigging wear personal protective equipment in compliance with the national and site-specific regulations.

3. Description of the Device

The Showtec Spectra Strobe is an IP65-rated strobe bar for temporary outdoor use. It has 360 1 W white LEDs and 384 0,5 W RGB LEDs to create flash and wash effects. You can control 12 sections of white LEDs and 24 sections of RGB LEDs via DMX. The LED bar has a wide beam angle. The optionally available beam shapers change the beam angle to 15°, 25° or 10° x 40°.

The Spectra Strobe runs stand-alone with built-in presets and effects, in master/slave mode and in 3-, 9-, 21-, 35-, 49- and 91-channel DMX mode with RDM support. The quick-lock system allows you to connect multiple units in horizontal or vertical direction, or suspend the device horizontally under a truss.
Two quick-lock brackets and a Power Pro True cable are included. Barndoors are available as an option (see 3.5. Optional Accessories on page 11).

3.1. Front View

Figure 2

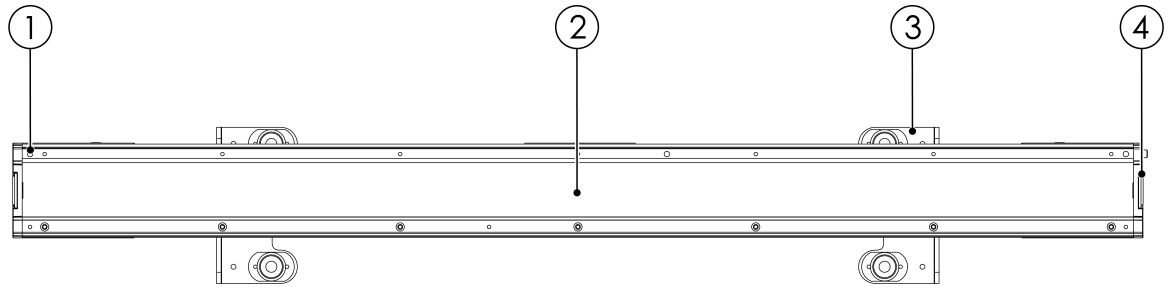

01) 4 x mounting opening for barndoor
02) 360 x 1 W white LED & 384 x 0,5 W RGB LED
03) 2 x mounting bracket
04) Opening for beam shaper

3.2. Back View

Figure 3

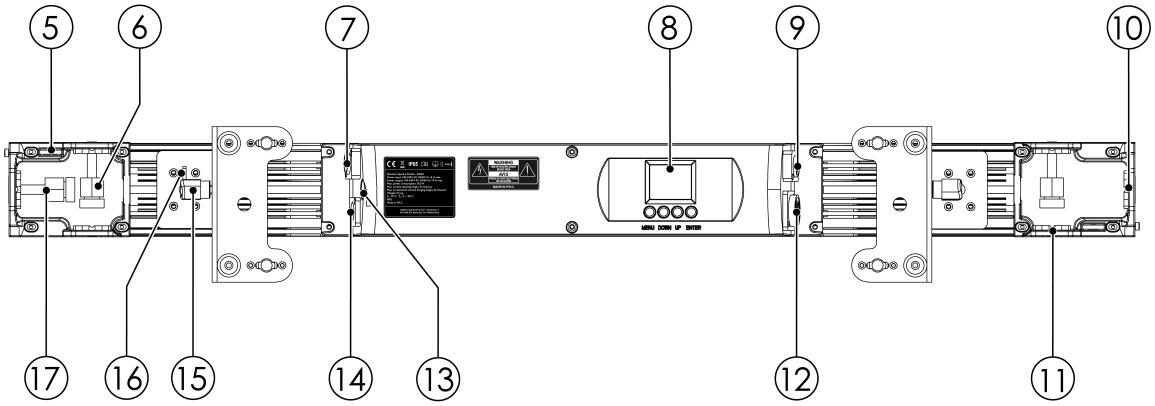

05) 2 x safety eye
06) 2 x quick-lock connector for horizontal mounting
07) IP65-rated 5-pin DMX signal connector IN
08) Control panel: LCD display and control buttons
09) IP65-rated 5-pin DMX signal connector OUT
10) Opening for vertical mounting
11) 2 x opening for horizontal mounting
12) IP65-rated Power Pro True connector OUT
13) Protective vent (M12x1,5)
14) IP65-rated Power Pro True connector IN
15) 2 x adjustment handle
16) 2 x locking mechanism
17) Quick-lock connector for vertical mounting

3.3. Product Specifications

Model:	Spectra Strobe

Source:	
Light source type	LED
Light source quantity	384
Light source power	0,5 W
LED color type	RGB
Refresh rate	12400 Hz
LED strobe quantity	360
LED strobe power	1 W

Control and programming:	
Control mode	Built-in program / DMX / manual / stand alone
DMX channels	3 / 9 / 21 / 35 / 49 / 91
Protocols	DMX / RDM
Display	LCD

Dynamic effects:	
Dimmer	0–100 %
Strobe	0–20 Hz

Electrical specifications and connections:	
Power supply	100–240 V AC 50/60 Hz
Power consumption	362 W
Power connector IN	Power Pro True
Power connector OUT	Power Pro True
DMX connector IN	XLR 5P
DMX connector OUT	XLR 5P

Mechanical specifications:	
Length	1025 mm
Width	140 mm
Height	192 mm
Weight	9,5 kg
IP rating	IP65
Housing	Aluminum die-cast
Color	Black

Product properties:	
Cooling	Passive

Rigging:	
Mounting options	Baseplate / bracket / quick-lock
Safety attachment	Yes

Thermal specifications:	
Maximum ambient temperature	40 °C
Minimum operating temperature	-5 °C

Included items:	
Included cables	Power Pro True cable
Included rigging	Quick-lock bracket

3.4. Dimensions

Figure 4

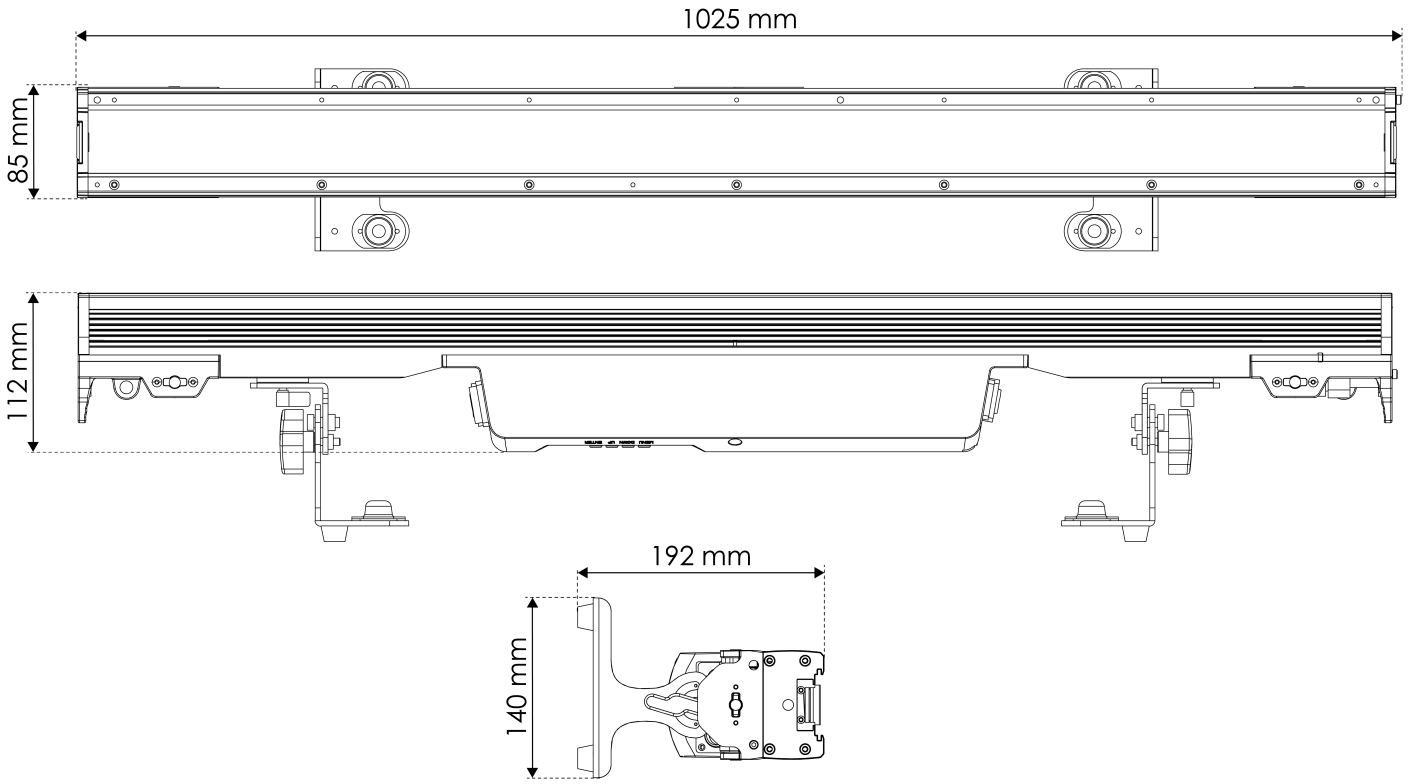

3.5. Optional Accessories

You can additionally purchase the following accessories:

- 42656 15° Beamshaper for Spectra Series
- 42657 25° Beamshaper for Spectra Series
- 42658 10/40° Beamshaper for Spectra Series
- 42659 Vertical bracket for Spectra Series
- 42660 Base plate for Spectra Series
- 42661 Barndoor for Spectra Series

Contact your Highlite International dealer for more information.

4. Installation

4.1. Safety Instructions for Installation



WARNING
Incorrect installation can cause serious injuries and damage of property.

If trussing systems are used, installation must be carried out only by instructed or skilled persons.

Follow all applicable European, national and local safety regulations concerning rigging and trussing.

4.2. Personal Protective Equipment

During installation, deinstallation and rigging wear personal protective equipment in compliance with the national and site-specific regulations.

4.3. Installation Site Requirements

- The device can be used indoors and temporarily outdoors.
- The device must be installed away from heating sources and direct sunlight.
- The ambient temperature must be in the range -5 and 40 °C.

4.4. Rigging

The device can be positioned on a flat surface or mounted to a truss or other rigging structure in any orientation. Make sure that all loads are within the pre-determined limits of the supporting structure.

CAUTION
Restrict the access under the work area during rigging/derigging.

4.4.1. Adjusting the Mounting Bracket Position

The position of the **mounting brackets (03)** can be adjusted sideways for setups with multiple devices. The position of the **mounting brackets (03)** must be alternated to create enough space for horizontal stacking (see 4.4.2. Horizontal Hanging Installation on page 14).

Figure 5

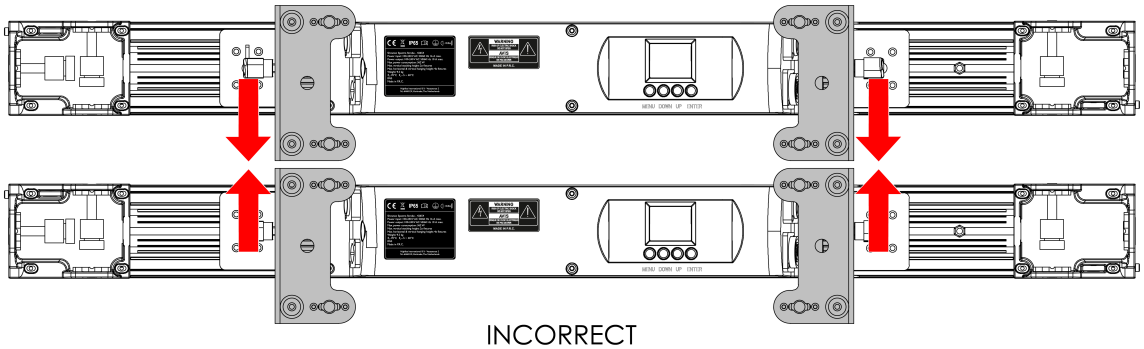

INCORRECT

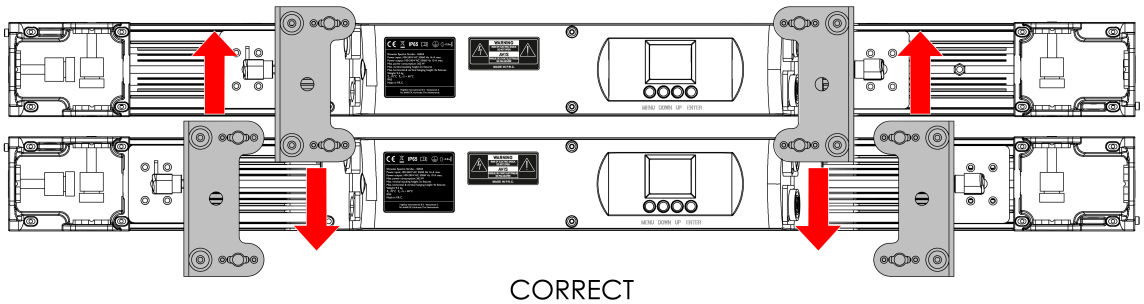

CORRECT

To adjust the position of the **mounting brackets (03)** follow the steps below:

01) Loosen the **mounting bracket (03)** by turning the **locking mechanism (16)** counterclockwise.
02) Slide the **mounting bracket (03)** to the correct position.

Figure 6

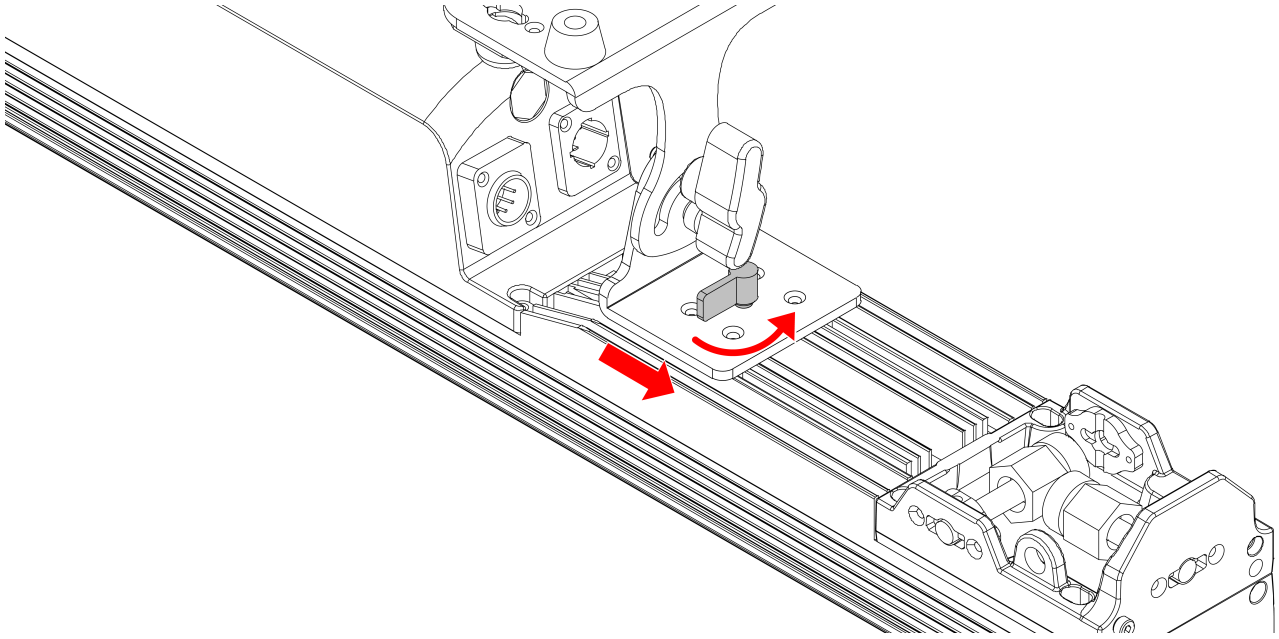

03) Secure the **mounting bracket (03)** by turning the **locking mechanism (16)** clockwise.

Figure 7

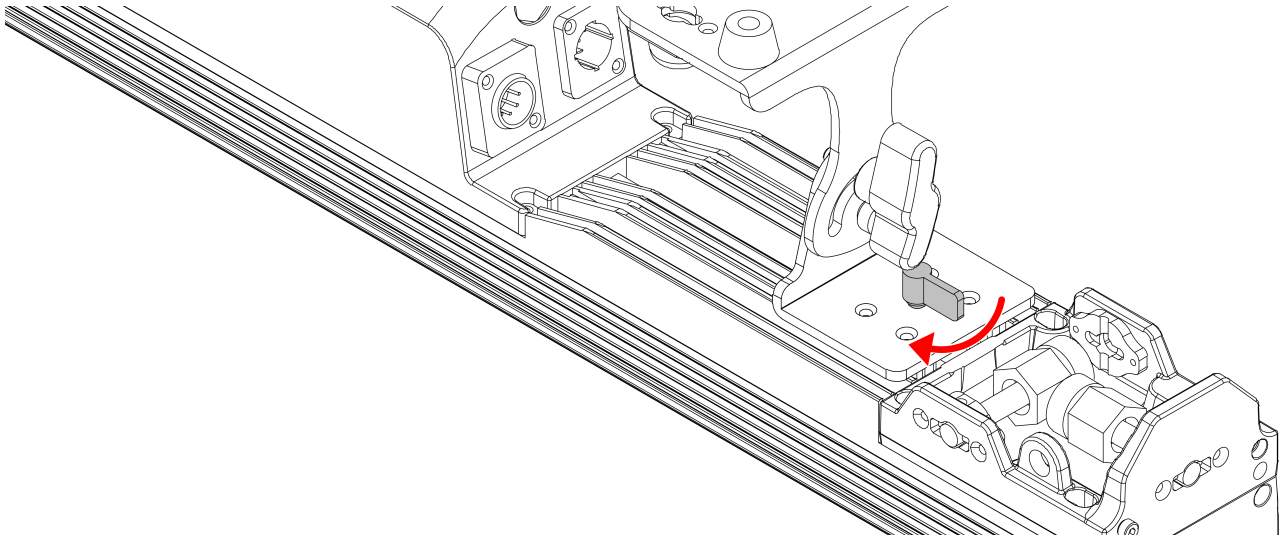

04) Repeat steps 1–3 to adjust the other **mounting bracket (03)**.

4.4.2. Horizontal Hanging Installation

The Spectra Strobe can be mounted to a truss horizontally. Maximum 3 additional devices can be mounted hanging from the 1st device using the built-in quick-lock system.

To mount the device, follow the steps below:

01) Adjust the position of the **mounting brackets (03)** for a setup with multiple devices (see 4.4.1. Adjusting the Mounting Bracket Position on page 13).
02) Fasten the 2 quick-lock brackets, supplied with the device to the 2 **mounting brackets (03)**. This step is optional. It is possible to mount the device horizontally with or without the quick-lock brackets.
03) Install the clamps to the 2 quick-lock brackets (if installed) or the 2 **mounting brackets (03)**. Make sure that you use clamps suitable for attaching the device to a truss.
04) Attach the device to the supporting structure. Make sure that the device cannot move freely.

Figure 8

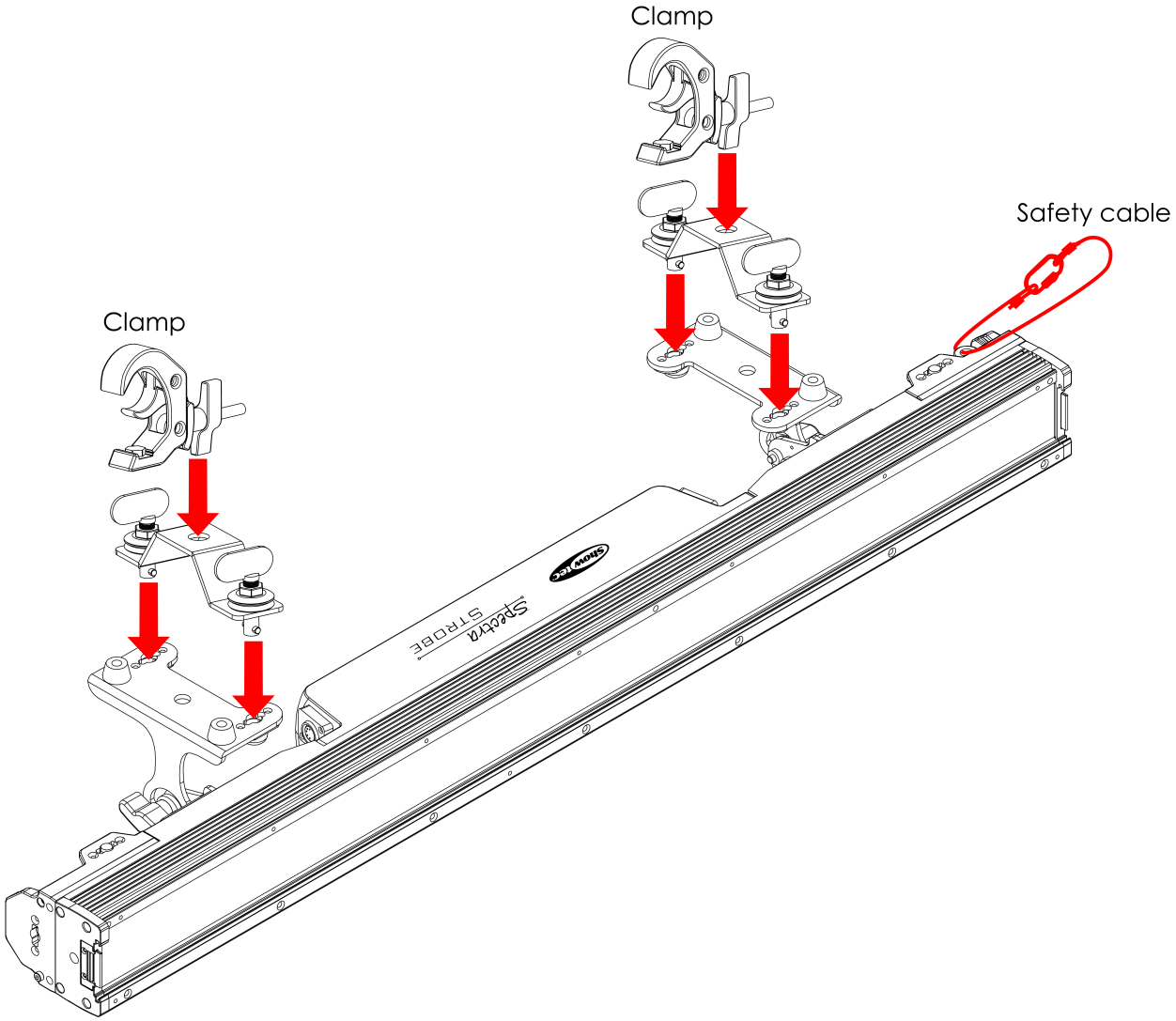

05) Secure the device with a secondary suspension, for example a safety cable. Make sure that the secondary suspension can hold 10 times the weight of the device. If possible, the secondary suspension should be attached to a supporting structure independent of the primary suspension. Put the safety cable through the **safety eye (05)**.
06) Adjust the position of the **mounting brackets (03)** of a 2nd device (see 4.4.1. Adjusting the Mounting Bracket Position on page 13).
07) Attach the 2 **quick-lock connectors for horizontal mounting (06)** of the 2nd device to the 2 **openings for horizontal mounting (11)** of the 1st device.
08) Secure the 2 **quick-lock connectors for horizontal mounting (06)** by turning the locking mechanism of the quick-lock connectors clockwise.

Figure 9

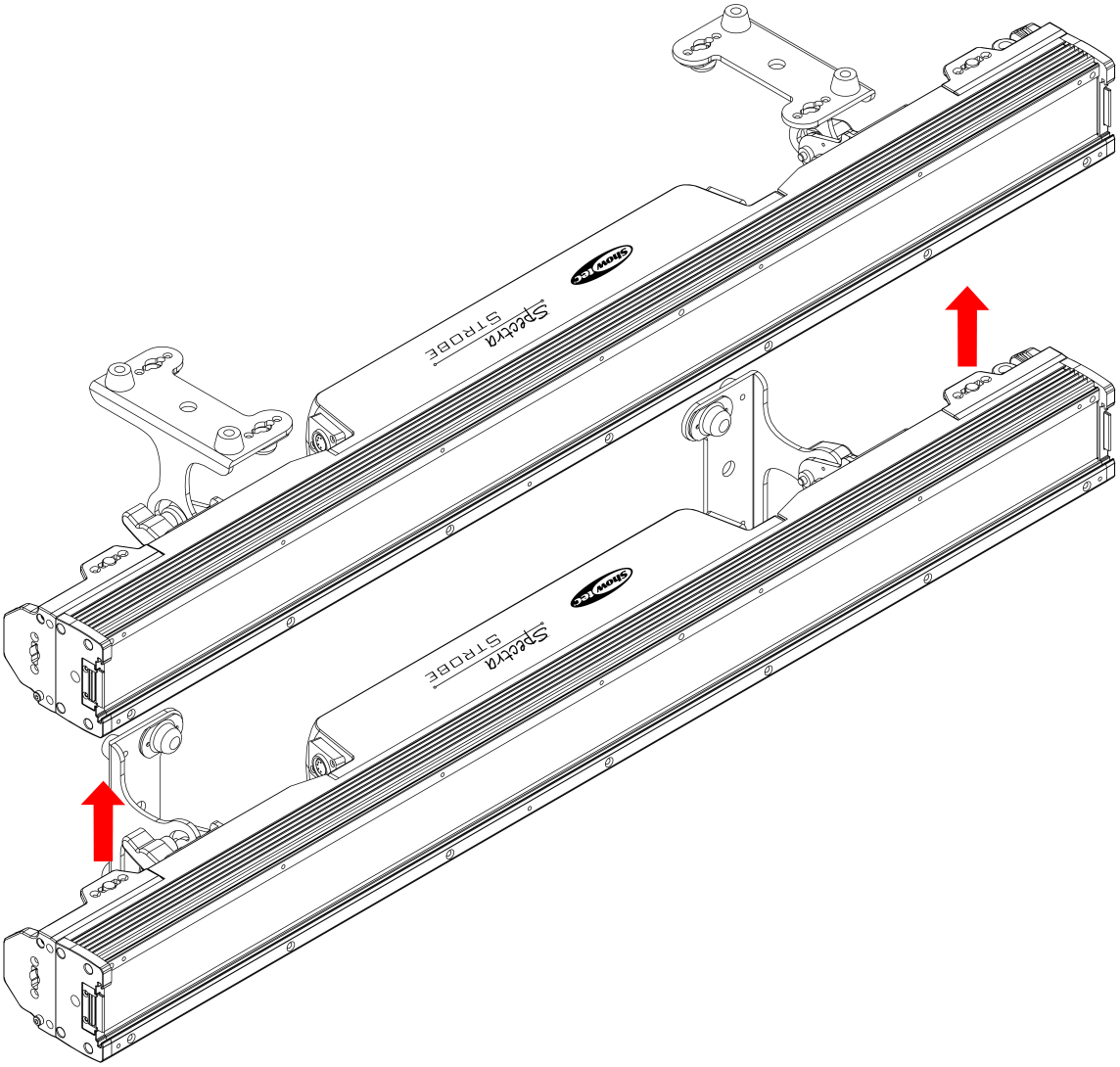

09) Repeat step 6–8 to connect a 3rd and 4th device.

4.4.3. Vertical Hanging Installation (Optional)

The Spectra Strobe can be mounted to a truss vertically using 1 included quick-lock bracket and 1 optionally available vertical bracket (see 3.5. Optional Accessories on page 11). Maximum 3 additional devices can be mounted hanging from the 1st device using the built-in quick-lock system.

To mount the device, follow the steps below:

01) Attach the vertical bracket to the device with the **quick-lock connector for vertical mounting (17)** and the screw on the vertical bracket.
02) Secure the **quick-lock connector for vertical mounting (17)** by turning the locking mechanism of the quick-lock connector clockwise.

Figure 10

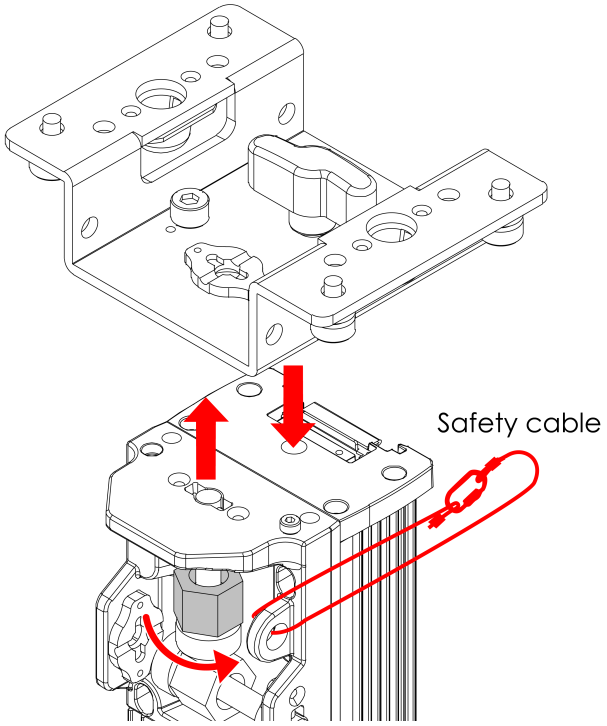

03) Fasten the quick-lock bracket on the vertical bracket.
04) Install the clamp to the quick-lock bracket. Make sure that you use a clamp suitable for attaching the device to a truss.

Figure 11

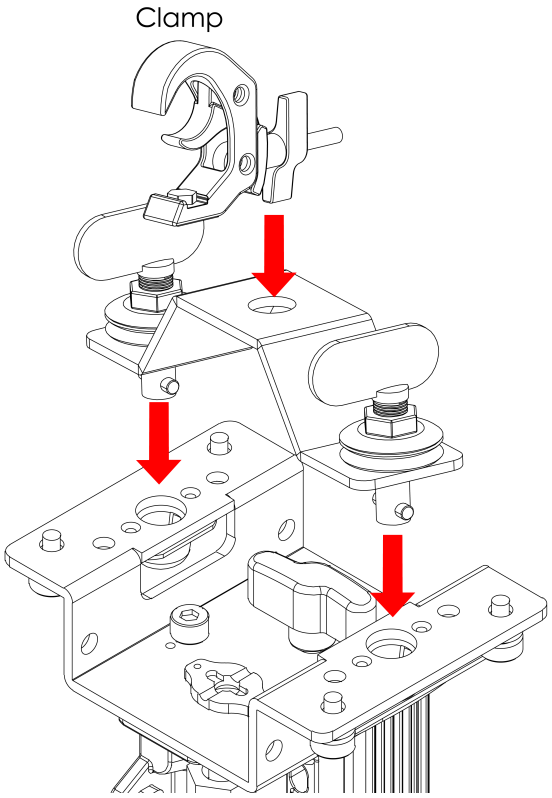

05) Attach the device to the supporting structure. Make sure that the device cannot move freely.
06) Secure the device with a secondary suspension, for example a safety cable. Make sure that the secondary suspension can hold 10 times the weight of the device. If possible, the secondary suspension should be attached to a supporting structure independent of the primary suspension. Put the safety cable through the **safety eye (05)**.
07) Attach the **quick-lock connector for vertical mounting (17)** of a 2nd device to the **opening for vertical mounting (10)** of the 1st device.
08) Secure the **quick-lock connector for vertical mounting (17)** by turning the locking mechanism of the quick-lock connector clockwise.

Figure 12

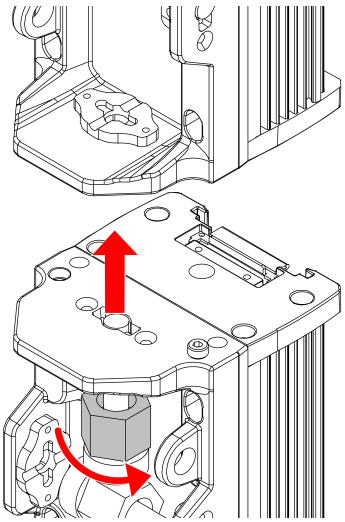

09) Repeat step 7 and 8 to connect a 3rd and 4th device.

4.5. Floorstanding Installation (Optional)

The Spectra Strobe can be mounted floorstanding using 1 optionally available base plate and 1 optionally available vertical bracket (see 3.5. Optional Accessories on page 11). Maximum 1 additional device can be stacked on top of the 1st device (see 4.5.1. Vertical Stacking) using the built-in quick-lock system.

To mount the device, follow the steps below:

01) Attach the device to the vertical bracket with the **quick-lock connector for vertical mounting (17)** and the screw on the vertical bracket.
02) Secure the **quick-lock connector for vertical mounting (17)** by turning the locking mechanism of the quick-lock connector clockwise.
03) Install the vertical bracket to the base plate using the 4 screws on the vertical bracket.

Figure 13

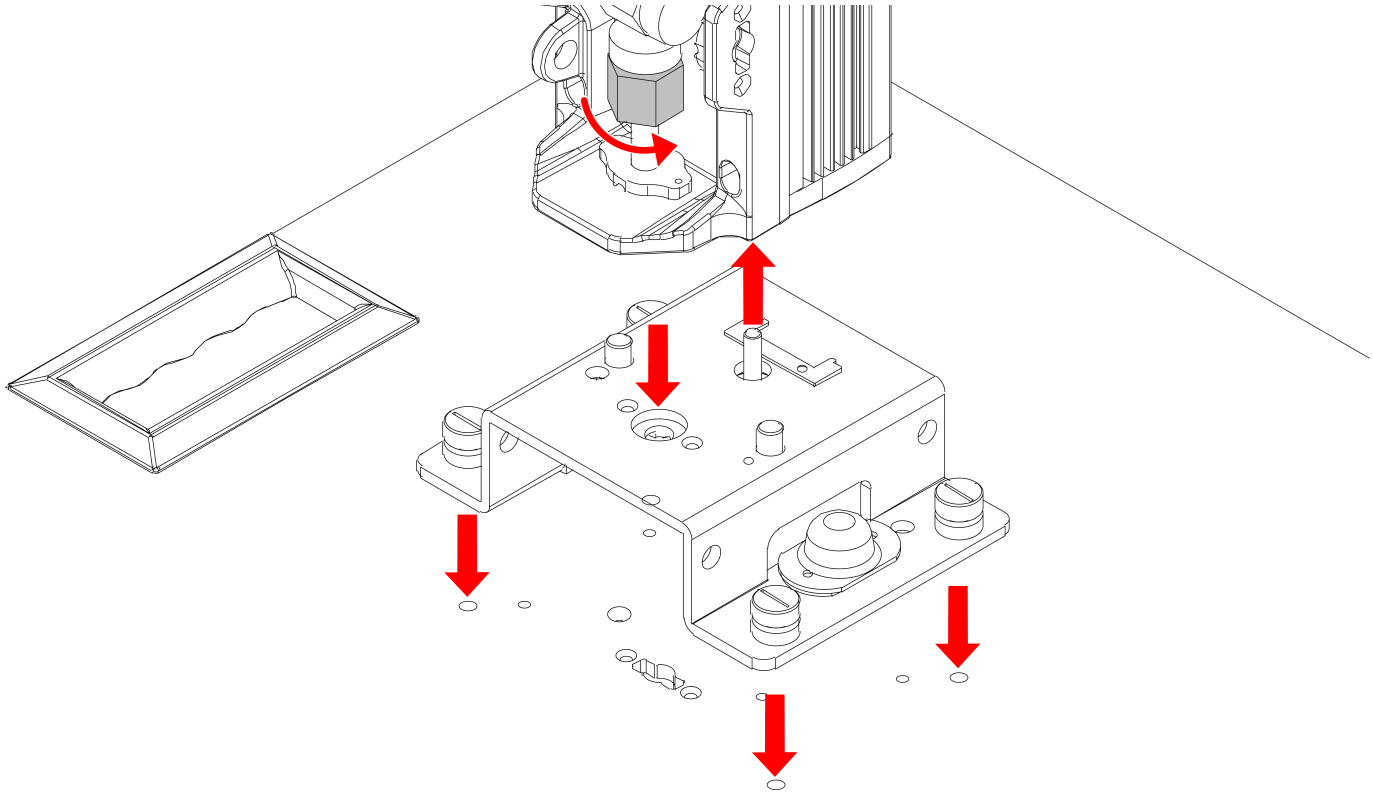

4.5.1. Vertical Stacking

The Spectra Strobe can be stacked on another floorstanding device using the built-in quick-lock system. Maximum 2 devices can be stacked vertically.

01) Install a 1st device to the base plate (see 4.5. Floorstanding Installation (Optional)).
02) Attach the **quick-lock connector for vertical mounting (17)** of a 2nd device to the **opening for vertical mounting (10)** of the 1st device.
03) Secure the **quick-lock connector for vertical mounting (17)** by turning the locking mechanism of the quick-lock connector clockwise.

Figure 14

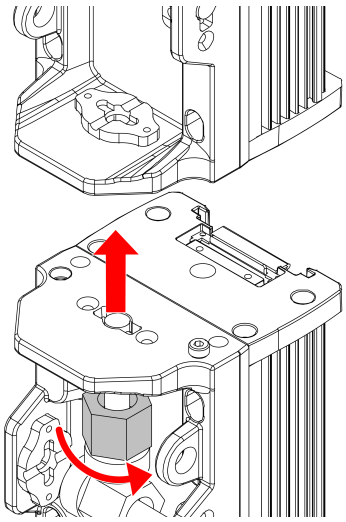

4.6. Angle Adjustment

You can adjust the angle of the device with the **adjustment handles (15)**. The movement of the **mounting bracket (03)** is restricted to 90 ° in 1 direction, but the direction of the angle adjustment can be changed.

Figure 15

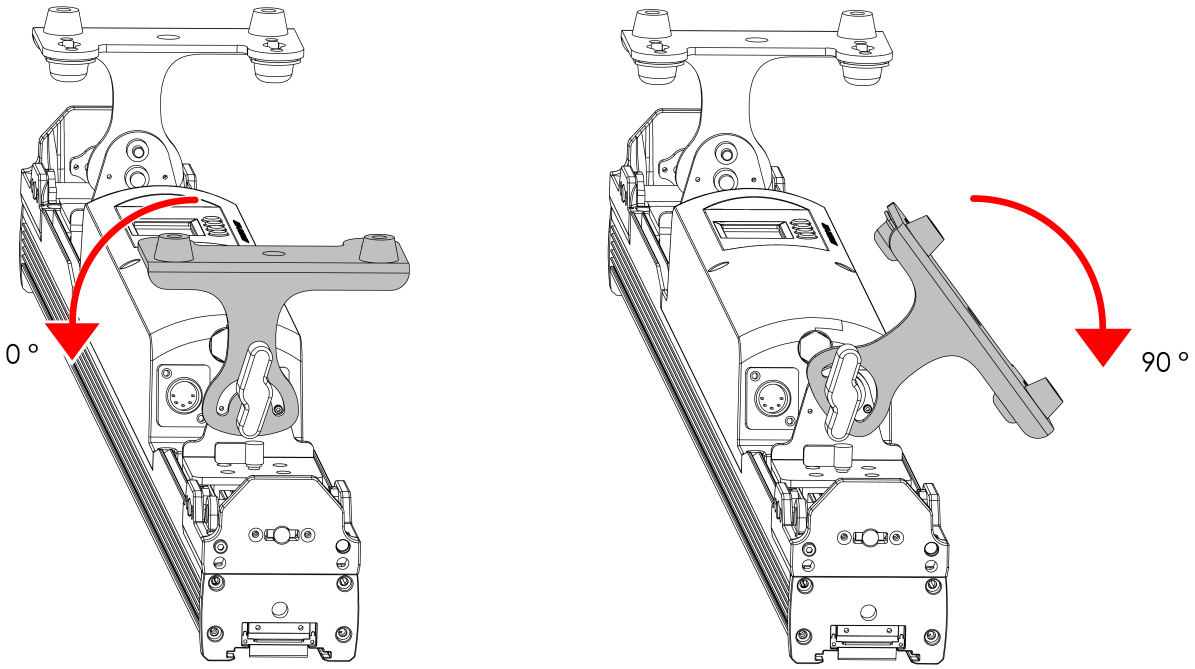

To change the direction of the angle adjustment, follow the steps below:

01) Use an allen key to remove the allen screw from the opening in the **mounting bracket (03)**.
02) Place the allen screw in the opening on the opposite side of the **mounting bracket (03)**.

03) Use an allen key to tighten the allen screw.

Figure 16

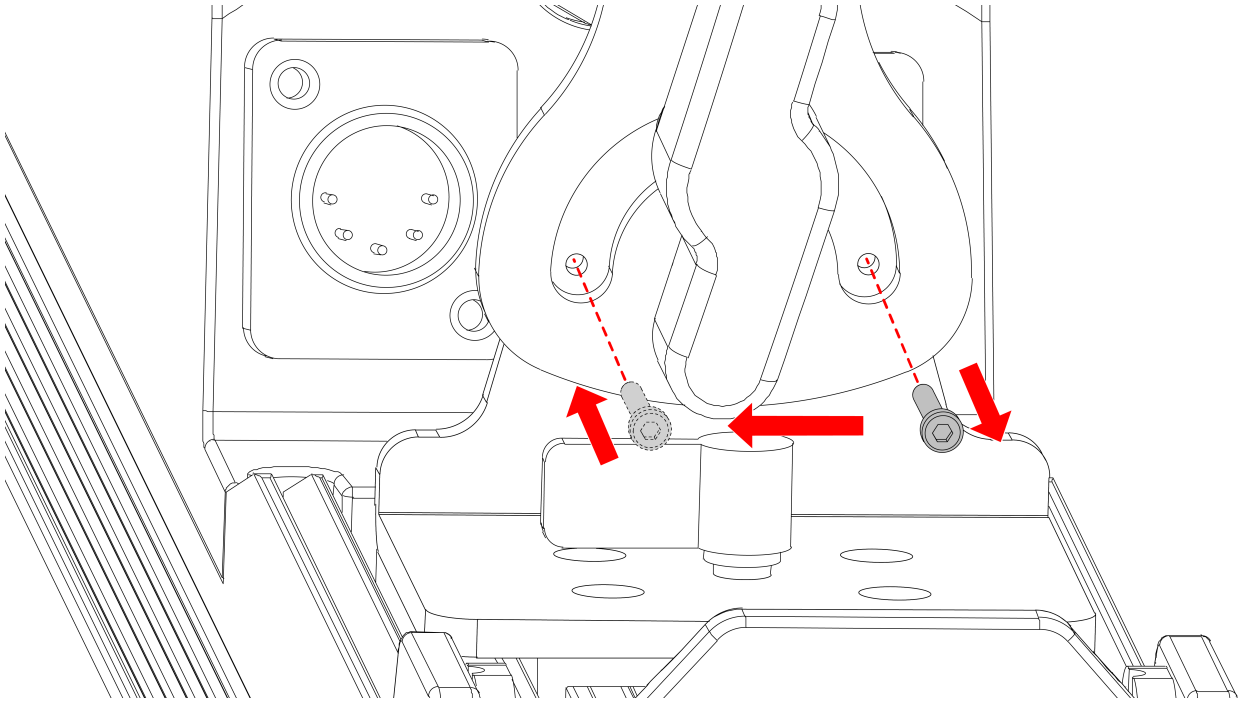

04) Turn the **adjustment handle (15)** counterclockwise to loosen it.
05) Tilt the device to the desired angle.

Figure 17

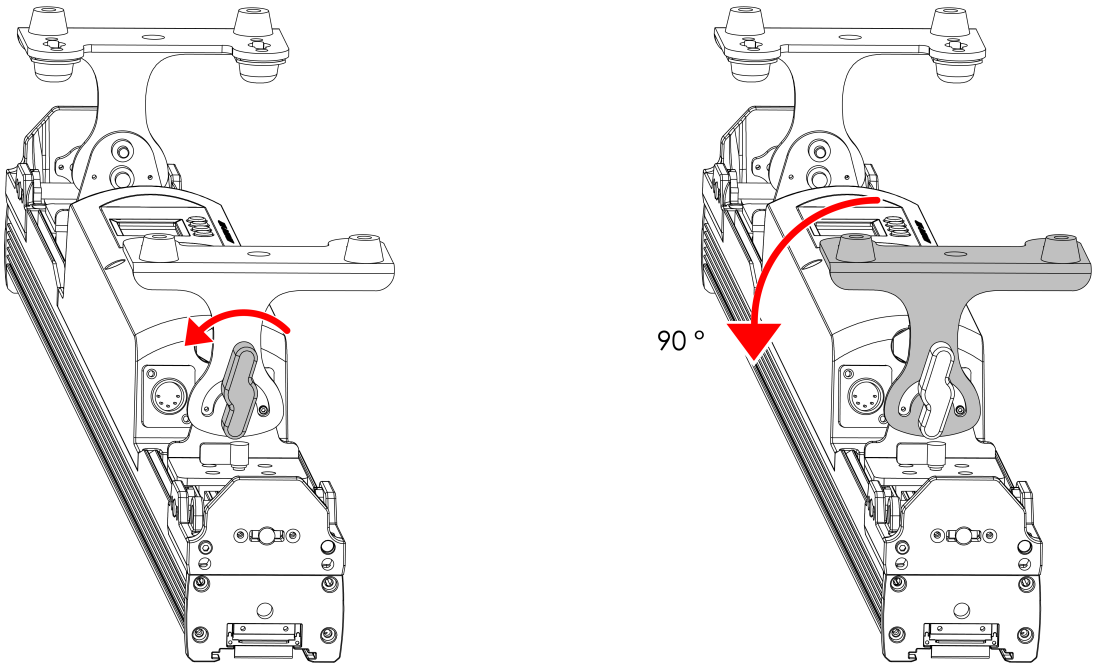

06) Turn the **adjustment handle (15)** clockwise to tighten it. Make sure that the device cannot move freely after the **adjustment handle (15)** is tightened.
07) Repeat steps 1–6 to adjust the other **mounting bracket (03)**.

4.7. Barndoor Installation

An optional barndoor (see 3.5. Optional Accessories on page 11) is available for use with the Spectra Strobe.

To install the barndoor, do the following:

Install the barndoor to 2 of the **mounting openings for barndoor (01)** on either side of the device using the screws on the barndoor.

Figure 18

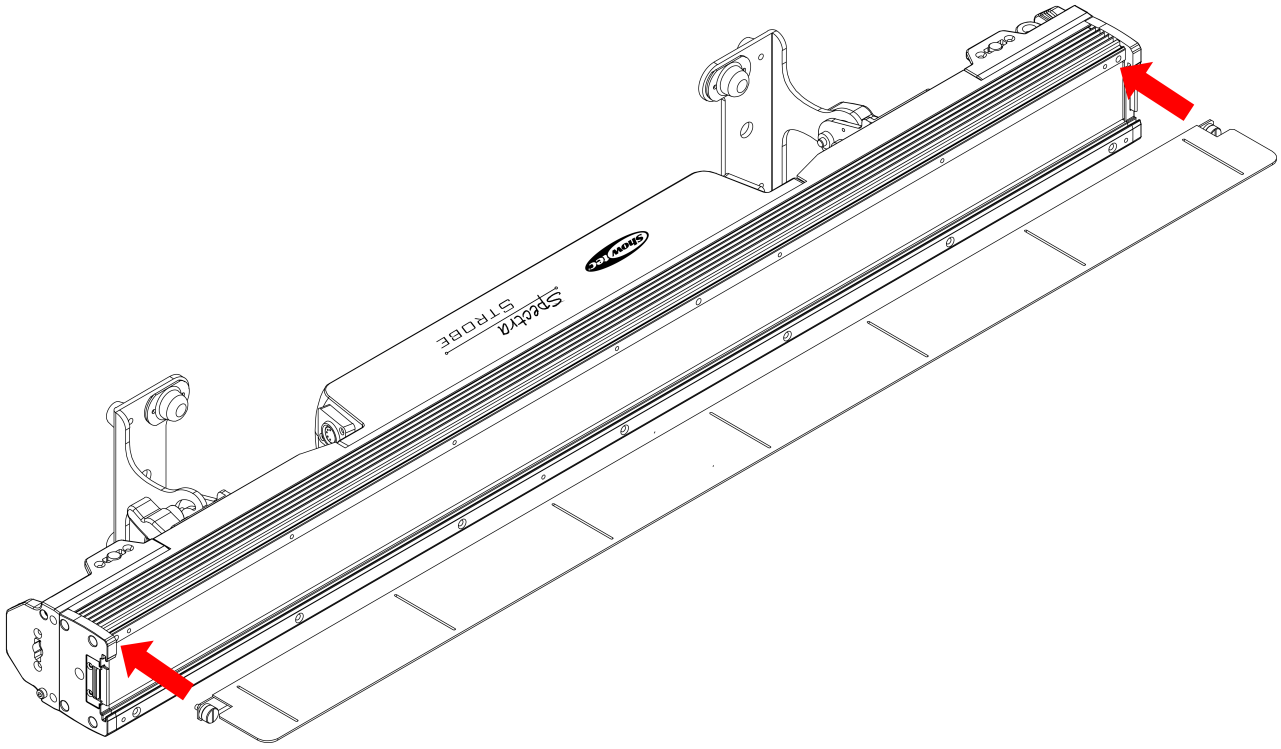

4.8. Beam Shaper Installation

Optional beam shapers (see 3.5. Optional Accessories on page 11) are available for use with the Spectra Strobe.

To install a beam shaper, follow the steps below:

01) Press down and hold the latch in the **opening for beam shaper (04)**.
02) Slide the beam shaper into the **opening for beam shaper (04)** until the latch snaps into place.

Figure 19

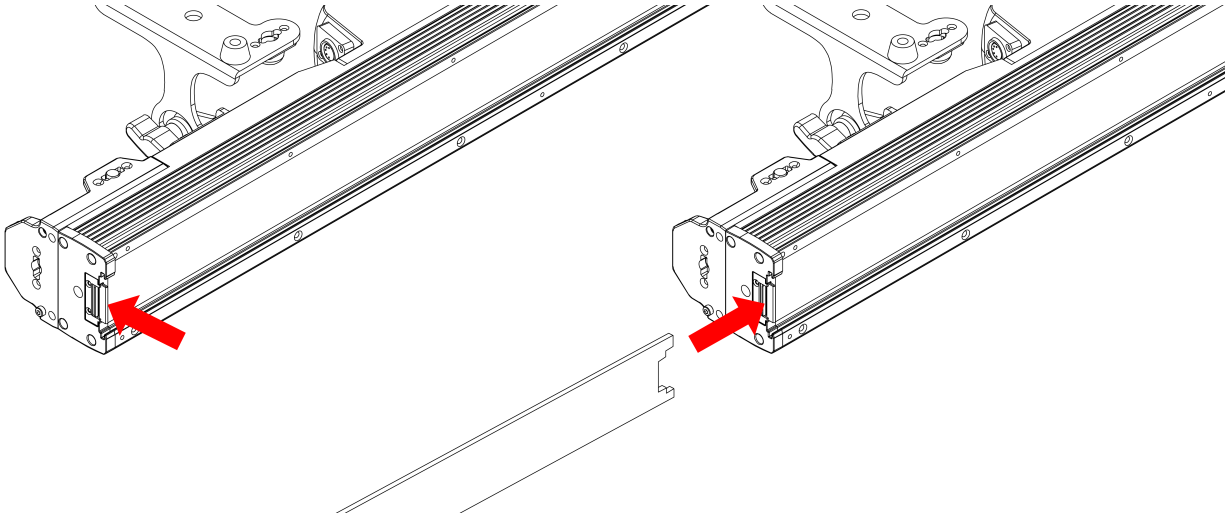

4.9. Connecting to Power Supply



DANGER
Electric shock caused by short-circuit

The device accepts AC mains power at 100–240 V and 50/60 Hz. Do not supply power at any other voltage or frequency to the device.

This device falls under IEC protection class I. Make sure that the device is always electrically connected to the ground (earth).

Before connecting the device to the socket-outlet:
- Make sure that the power supply matches the input voltage specified on the information label on the device.
- Make sure that the socket-outlet has a ground (earth) connection.

Connect the device to the socket-outlet with the power plug. Do not connect the device to a dimmer circuit, as this may damage the device.

This device is IP65 rated.

- Do not expose the device to conditions that exceed the rated IP class conditions.
- Keep the connectors sealed with the rubber caps when the connectors are not in use.
- Do not connect the cables from above the connectors, if the device is installed outdoors. Make a 'drip loop' in the cable so that rain water cannot enter the device.
- Make sure that the cable run is not too heavy. A heavy cable run can cause damage to the connectors. If the connectors are damaged, their ingress protection (IP) can deteriorate.

4.10. Power Linking of Multiple Devices

This device supports power linking. Power can be relayed to another device via the power OUT connector. Note that the input and the output connectors have different designs: one type cannot be connected to the other.

Power linking of multiple devices must be carried out only by instructed or skilled persons.



WARNING
Incorrect power linking may lead to overload of the electrical circuit and result in serious injuries and damage of property.

To prevent overload of the electrical circuit, when power linking multiple devices:

- Use cables with sufficient current-carrying capacity. The power cable supplied with the device is not suitable for power linking of multiple devices.
- Make sure that the total current draw of the device and all connected devices does not exceed the rated capacity of the power cables and the circuit breaker.
- Do not link more devices on one power link than the maximum recommended number.

Maximum recommended number of devices:
- at 100–120 V: 3 devices Spectra Strobe
- at 200–240 V: 6 devices Spectra Strobe

5. Setup

5.1. Warnings and Precautions



Attention
Connect all data cables before supplying power.
Disconnect power supply before connecting or disconnecting data cables.

5.2. Stand-alone Setup

When the Spectra Strobe is not connected to a controller or to other devices, it functions as a stand-alone device. It can be operated manually via the control panel or in auto mode.

For more information refer to Control Modes.

5.3. DMX Connection

5.3.1. DMX-512 Protocol

You need a DMX serial data link to run light shows of one or more devices using a DMX-512 controller.

The Spectra Strobe has 5-pin DMX signal IN and OUT connectors.

The pin assignment is as follows: pin 1 (ground), pin 2 (-), pin 3 (+), pin 4 (N/C), pin 5 (N/C).

Devices on a serial data link must be daisy-chained in a single line. The number of devices that you can control on one data link is limited by the combined number of the DMX channels of the connected devices and the 512 channels available in one DMX universe.

To comply with the TIA-485 standard, no more than 32 devices should be connected on one data link. In order to connect more than 32 devices on one data link, you must use a DMX optically isolated splitter/booster, otherwise this may result in deterioration of the DMX signal.

Note:

- Maximum recommended DMX data link distance: 300 m
- Maximum recommended number of devices on a DMX data link: 32 devices

5.3.2. DMX Cables

Shielded twisted-pair cables with 5-pin XLR connectors must be used for reliable DMX connection. You can purchase DMX cables directly from your Highlite International dealer or make your own cables.

If you use XLR audio cables for DMX data transmission, this may lead to signal degradation and unreliable operation of the DMX network.

When you make your own DMX cables, make sure that you connect the pins and wires correctly as shown in the figure below.

Figure 20

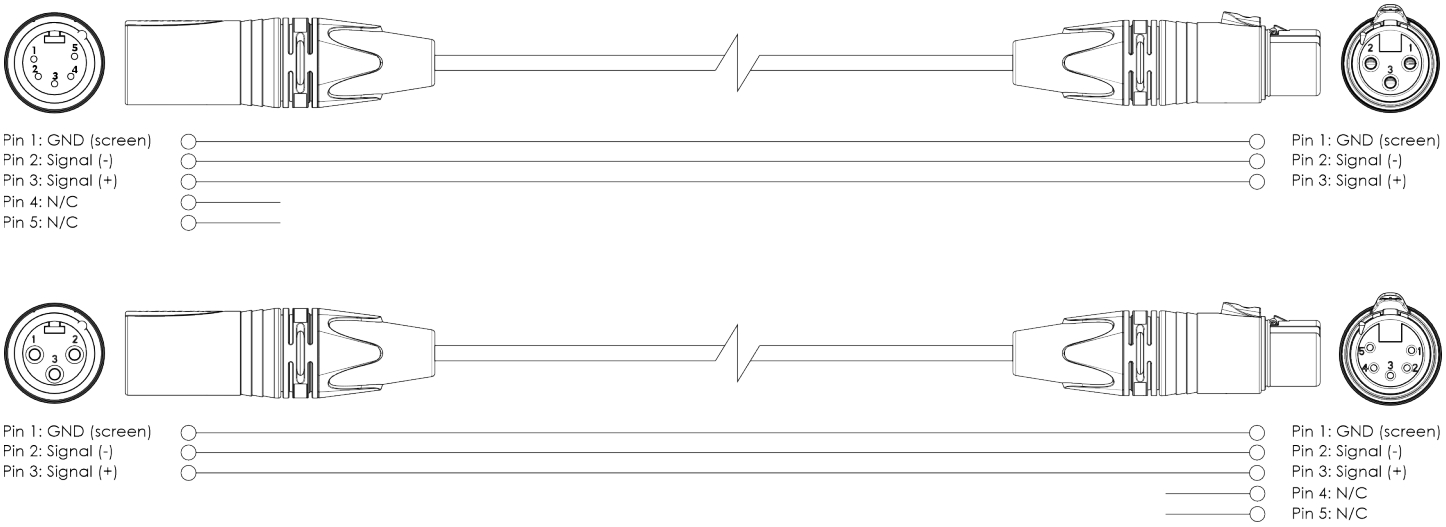

5.3.3. Master/Slave Setup

The Spectra Strobe supports master/slave control mode. To connect multiple devices in a master/slave setup, follow the steps below:

01) Connect the DMX OUT connector of the 1st device to the DMX IN connector of the 2nd device with a 5-pin DMX cable.
02) Repeat step 1 to connect all devices in a daisy-chain.
03) Connect a DMX terminator (120 Ω resistor) to the DMX OUT connector of the last device on the data link.
04) Set the 1st device on the data link as a master device (see 6.6.1.3. Slave on page 33).
05) Set the remaining devices as slave devices (see 6.6.1.3. Slave on page 33).

Figure 21

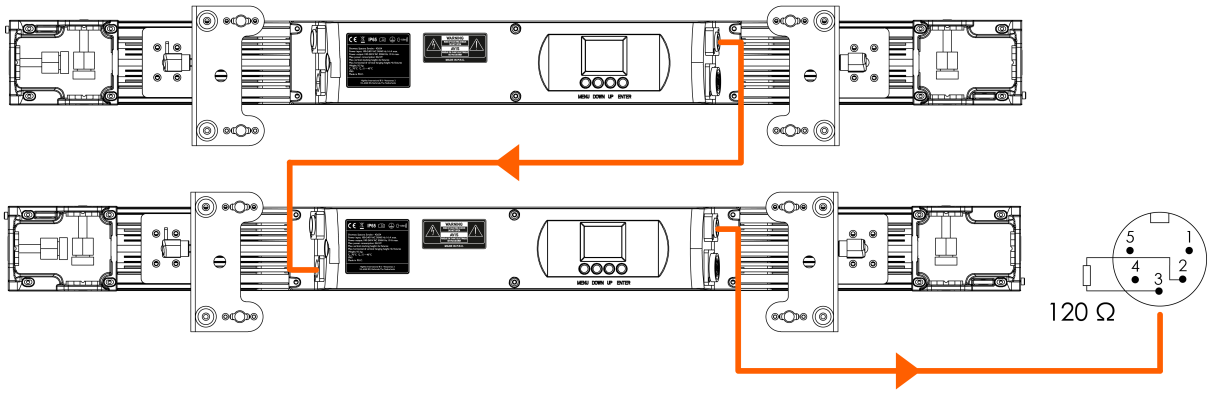

5.3.4. DMX Linking

To connect multiple devices on one DMX data link, follow the steps below:

01) Use a 5-pin DMX cable to connect the DMX OUT connector of the lighting controller to the DMX IN connector of the 1st device.
02) Connect the DMX OUT connector of the 1st device to the DMX IN connector of the 2nd device with a 5-pin DMX cable.
03) Repeat step 2 to connect all devices in a daisy-chain.
04) Connect a DMX terminator (120 Ω resistor) to the DMX OUT connector of the last device on the data link.

Figure 22

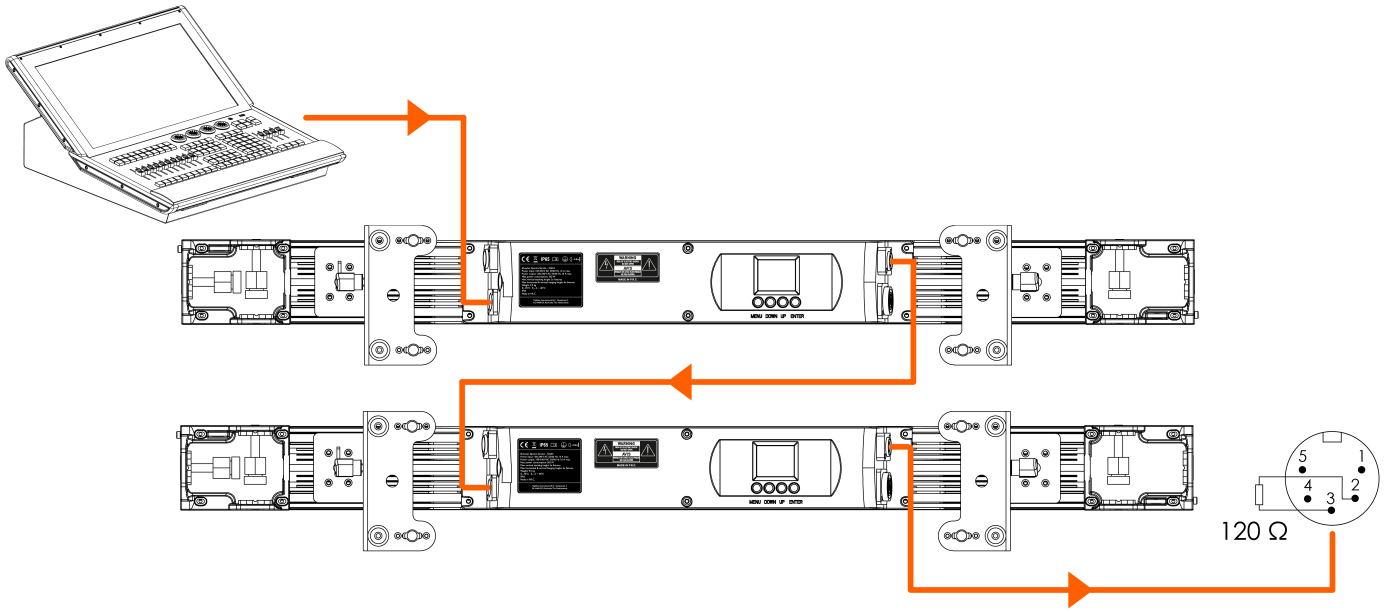

5.3.5. DMX Addressing

In a setup with multiple devices, make sure that you set the DMX starting address of each device correctly. The Spectra Strobe has 6 personalities: 03 CH (3 channels), 09 CH (9 channels), 21 CH (21 channels), 35 CH (35 channels), 49 CH (49 channels), 91 CH (91 channels).

If you want to connect multiple devices on one data link and use them in 91-channel mode, for example, follow the steps below:

01) Set the starting address of the 1st device on the data link to 1 (001).
02) Set the starting address of the 2nd device on the data link to 92 (092), as 1 + 91 = 92.
03) Set the starting address of the 3rd device on the data link to 183 (183), as 92 + 91 = 183.
04) Continue assigning the starting addresses of the remaining devices by adding 91 each time to the previous number.

When addressing multiple devices on one data link, make sure that there are no overlapping channels. You cannot control devices individually if they have overlapping channels.

6. Operation

6.1. Safety Instructions for Operation

Attention
This device must be used only for the purposes it is designed for.

This device is intended for professional use as a strobe bar. It can be installed indoors and temporarily outdoors. This device is not suitable for households and for general lighting.

Any other use, not mentioned under intended use, is regarded as non-intended and incorrect use.

Attention
Power supply

Before connecting the device to the power supply, make sure that the current, voltage and frequency match the input voltage, current and frequency specified on the information label on the device.

6.2. Control Modes

The Spectra Strobe supports the following control modes:

- Stand-alone: Manual control, built-in programs
- Master/Slave: Manual control, built-in programs
- DMX-512: 03 CH (3 channels) 09 CH (9 channels), 21 CH (21 channels), 35 CH (35 channels), 49 CH (49 channels), 91 CH (91 channels)

For more information about how to connect the devices, refer to Setup (see 5. Setup on page 25).

To operate the device manually as a stand-alone device or in a master/slave setup:

- Set up the master/slave mode in the Mode menu (see 6.6.1.3. Slave on page 33).
- Adjust the parameters for manual control in the Mode menu (see 6.6.1.4. Manual on page 33).
- Select a built-in program in the Mode menu (see 6.6.1.2. Auto on page 33).

To operate the device with a DMX controller:

01) Set the DMX starting address of the device in the DMX submenu (see 6.6.1.1.1. DMX Address on page 32).
02) Select a DMX personality in the DMX submenu (see 6.6.1.1.2. DMX Mode on page 32). Refer to DMX Channels (see 6.7. DMX Channels on page 38) for a complete overview of all DMX channels.

6.3. Control Panel

Figure 23

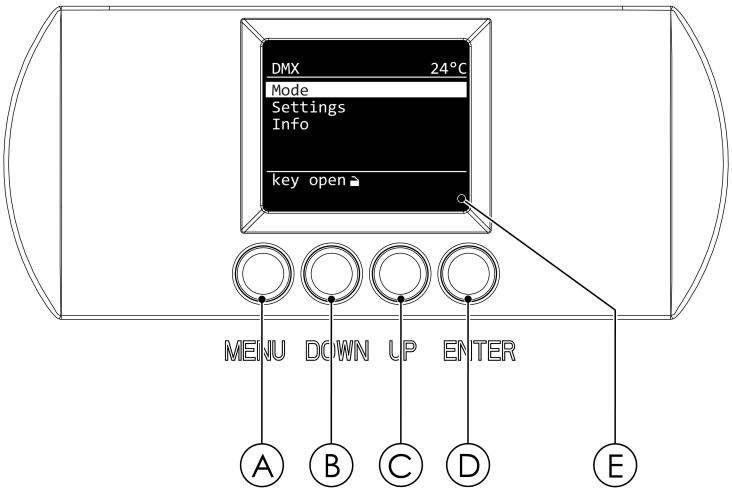

A) MENU touch button
B) DOWN touch button
C) UP touch button
D) ENTER touch button
E) OLED display

- Use the **MENU** button to exit the current submenu, to return to the Main Menu and to return to the start screen.
- Use the **UP/DOWN** buttons to navigate through the menus or to increase/decrease numeric values.
- Use the **ENTER** button to open the desired menu, to confirm your choice or to set the currently selected value.

6.4. Start-up

Upon start-up the display shows a splash screen with the Showtec logo and the name of the device:



Immediately afterwards, the display shows the start screen. The start screen provides information about the currently active control mode, the DMX starting address of the device and the temperature of the fixture, for example:



Press the **MENU** button to open the main menu.

Note:

If the display is locked, you need to enter a password to access the main menu. The default password is pressing the **UP/DOWN** buttons in the following order: **UP**, **DOWN**, **UP**, **DOWN**.

6.5. Menu Overview

Level 1	Level 2	Level 3	Level 4
Mode (see 6.6.1. Mode on page 31)	DMX	DMX Address	001–512
		DMX Mode	03 CH
			09 CH
			21 CH
			35 CH
			49 CH
			91 CH
	Auto	Program	01–31
		Program Speed	01–10
	Slave	Enable	
		Disable	
	Manual	Dimmer	000–255
		Red	000–255
		Green	000–255
		Blue	000–255
		White	000–255
		Color	01–51
		Strobe White	00–20
		Strobe RGB	00–20
Settings (see 6.6.2. Settings on page 34)	Dim Curve	Linear	
		Square Law	
		Inv Square Law	
		S-type	
	Dimmer Speed	LED	
		Tungsten	
	Disp Key	OFF	
		ON	
	DMX Hold	Hold	
		Black	
	Display Timeout	Off	
		30S	
	Invert Display	Normal	
		Inverted	
	White Balance	Red	000–255
		Green	000–255
		Blue	000–255
	Factory Reset	Yes	
		No	
Info (see 6.6.3. Info on page 37)	Software Version		
	Hardware Version		
	Total Runtime		
	RDM UID		

6.6. Main Menu Options

The main menu has the following options:



Mode

Settings

Info

01) Press the **UP/DOWN** buttons to navigate through the menu.
02) Press the **ENTER** button to open submenus.

6.6.1. Mode

In this menu you can adjust the DMX settings and control mode settings of the device.

01) Press the **UP/DOWN** buttons to select one of the 4 options:



- DMX (see 6.6.1.1. DMX)
- Auto (see 6.6.1.2. Auto)
- Slave (see 6.6.1.3. Slave)
- Manual (see 6.6.1.4. Manual)

02) Press the **ENTER** button to confirm the selection.

Note:

The top left corner of the menu shows the currently active control mode: DMX, Auto, Slave or Manual.

6.6.1.1. DMX

In this submenu you can set the DMX starting address of the device and change the DMX control mode.

01) Press the **UP/DOWN** buttons to select one of the 2 options:



- DMX Address (see 6.6.1.1.1. DMX Address)
- DMX Mode (see 6.6.1.1.2. DMX Mode)

02) Press the **ENTER** button to confirm the selection.

6.6.1.1.1. DMX Address

In this submenu you can set the DMX starting address of the device.

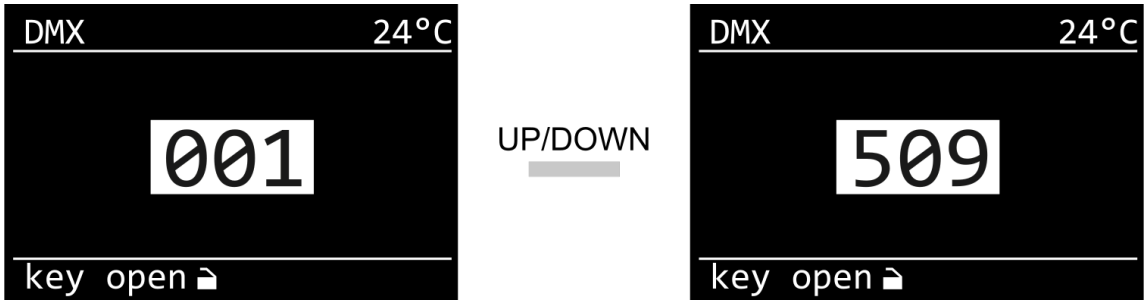

01) Press the **UP/DOWN** buttons to select the starting address of the device. The selection range is 001–512.
02) Press the **ENTER** button to confirm the selection.

6.6.1.1.2. DMX Mode

In this submenu you can select the DMX channel mode.

01) Press the **UP/DOWN** buttons to select one of the 6 options:

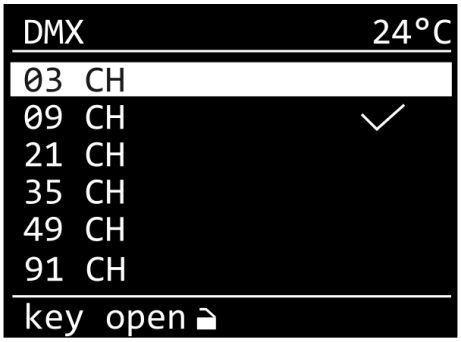

- 03 CH: 3 channels
- 09 CH: 9 channels
- 21 CH: 21 channels
- 35 CH: 35 channels
- 49 CH: 49 channels
- 91 CH: 91 channels

02) Press the **ENTER** button to confirm the selection.

6.6.1.2. Auto

In this submenu you can select a built-in program and adjust the speed of the program.

01) Press the **UP/DOWN** buttons to select one of the 2 options:

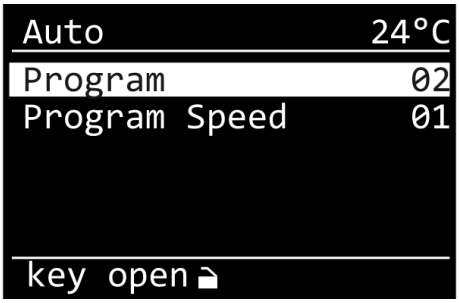

- Program: Select one of the 31 built-in programs (01–31)
- Speed: Set the speed of the built-in program (01–10)

02) Press the **ENTER** button to confirm the selection.
03) Press the **UP/DOWN** buttons to increase/decrease the value.
04) Press the **ENTER** button to confirm the selection.

6.6.1.3. Slave

In this submenu you can configure the device as a master or slave device.

01) Press the **UP/DOWN** buttons to select one of the 2 options:



- Enable: Set the device as a slave device
- Disable: Set the device as a master device or stand-alone device

02) Press the **ENTER** button to confirm the selection.

6.6.1.4. Manual

In this submenu you can manually configure the output settings of the device.

01) Press the **UP/DOWN** buttons to select one of the 8 options:

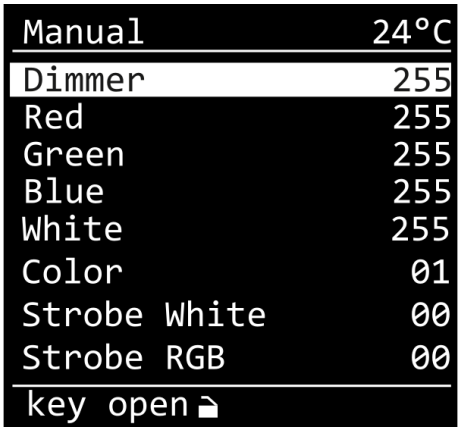

- Dimmer: Set the intensity of the light output (000–255)
- Red: Set the intensity of the red LED color (000–255)
- Green: Set the intensity of the green LED color (000–255)
- Blue: Set the intensity of the blue LED color (000–255)

- White: Set the intensity of the white LED color (000–255)
- Color: Set a preset LED color (01–51)
- Strobe White: Set the intensity of the white strobe in Hertz (00–20)
- Strobe RGB: Set the intensity of the RGB strobe in Hertz (00–20)

02) Press the **ENTER** button to confirm the selection.
03) Press the **UP/DOWN** buttons to increase/decrease the value.
04) Press the **ENTER** button to confirm the selection.

6.6.2. Settings

In this menu you can adjust the dimmer settings and general settings of the device.

01) Press the **UP/DOWN** buttons to select one of the 8 options:

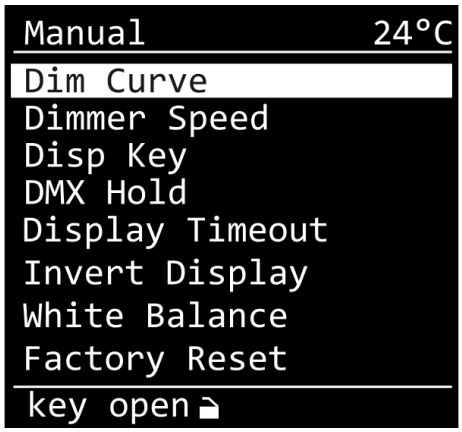

- Dim Curve: Select the dimming curve of the fixture (see 6.6.2.1. Dim Curve)
- Dimmer Speed: Set the reaction time for the LEDs (see 6.6.2.2. Dimmer Speed)
- Disp Key: Turn the display lock on or off (see 6.6.2.3. Disp Key)
- DMX Hold: Set the behavior of the device in case of a DMX failure. There are 2 options: Black (the device will black out the light output) and Hold (the device will use the last received DMX signal)
- Display Timeout: Adjust if the display turns off automatically after a period of inactivity (Off/30S)
- Invert Display: Rotate the display at 180° (Yes/No)
- White Balance: Adjust the color brightness of the LEDs (see 6.6.2.4. White Balance)
- Factory Reset: Reset the settings of the device to the default factory settings (Yes/No)

02) Press the **ENTER** button to confirm the selection.
03) Press the **UP/DOWN** buttons to change the value.
04) Press the **ENTER** button to confirm the selection.

Note:

The top left corner of the menu shows the currently active control mode: DMX, Auto, Slave or Manual.

6.6.2.1. Dim Curve

In this submenu you can select the dimming curve.

01) Press the **UP/DOWN** buttons to select one of the 4 options:

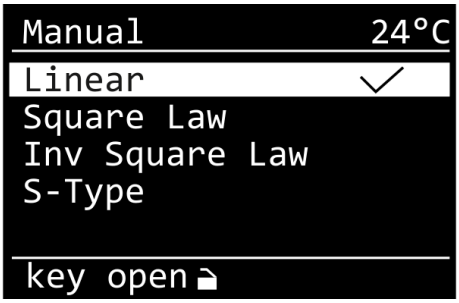

- Linear
- Square
- Inverse Square
- S-Curve

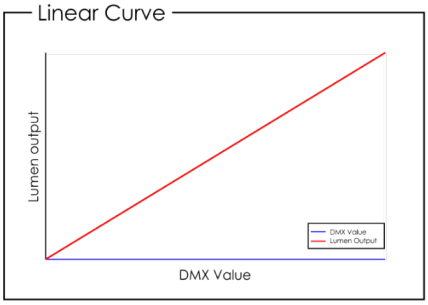

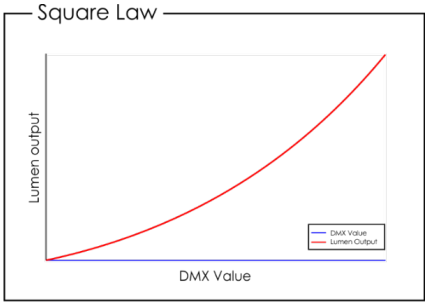

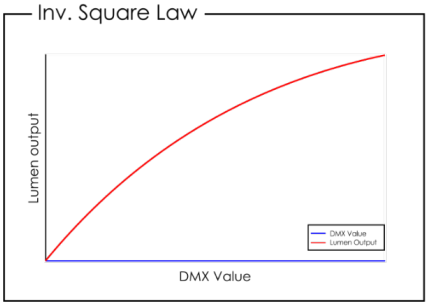

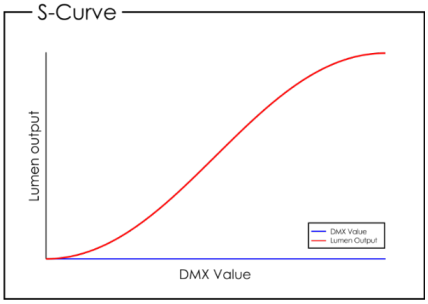

02) Press the **ENTER** button to confirm the selection.

6.6.2.2. Dimmer Speed

In this submenu you can select the reaction time for the LEDs.

01) Press the **UP/DOWN** buttons to select one of the 2 options:



- LED: The LEDs react without a delay
- Tungsten: The LEDs react with a delay to simulate the effect of a tungsten lamp

02) Press the **ENTER** button to confirm the selection.

6.6.2.3. Disp Key

In this submenu you can activate the display lock.

01) Press the **UP/DOWN** buttons to select one of the 2 options:

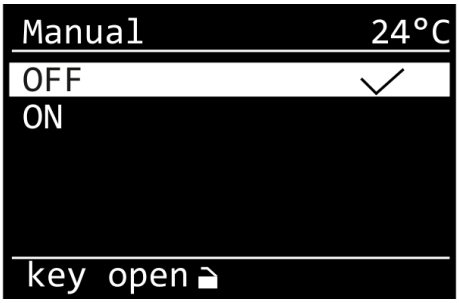

- OFF: The access to the main menu remains unlocked
- ON: The display lock is on. Do not press any button within 10 s of activating the lock. If you do so, the lock will be canceled. The selection remains but the display is not locked

02) Press the **ENTER** button to confirm the selection.

Note:

If the display is locked, you need to enter a password to access the main menu. The default password is pressing the **UP/DOWN** buttons in the following order: **UP**, **DOWN**, **UP**, **DOWN**.

6.6.2.4. White Balance

In this submenu you can adjust color brightness of the LEDs.

01) Press the **UP/DOWN** buttons to select one of the 3 options:

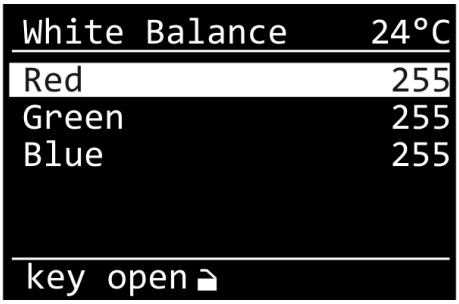

- Red: Set the intensity of the red LED color (000–255)
- Green: Set the intensity of the green LED color (000–255)
- Blue: Set the intensity of the blue LED color (000–255)

02) Press the **ENTER** button to confirm the selection
03) Press the **UP/DOWN** buttons to change the value.
04) Press the **ENTER** button to confirm the selection.

6.6.3. Info

In this menu you can view the UID, the LED operating hours and the firmware version of the device.

01) Press the **UP/DOWN** buttons to select one of the 4 options:

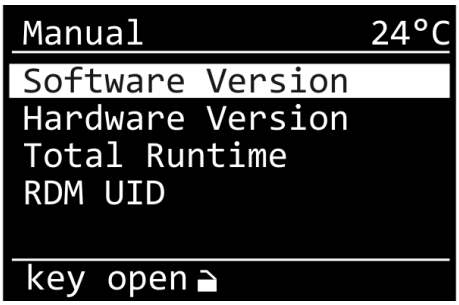

- Software Version: View the current software version of the device
- Hardware Version: View the current hardware version of the device
- Total Runtime: View the total runtime of the device
- RDM UID: View the unique identification (UID) number of the device

02) Press the **ENTER** button to view an option.

Note:

The top left corner of the menu shows the currently active control mode: DMX, Auto, Slave or Manual.

6.7. DMX Channels

6.7.1. White and RGB LEDs per DMX Personality

	03 CH	09 CH	21 CH	35 CH	49 CH	91 CH
White LED	All LEDs	All LEDs	2 sections	4 sections	6 sections	12 sections
RGB LED	No RGB function	All LEDs	4 sections	8 sections	12 sections	24 sections

6.7.2. Functions per DMX Functionality

Function	03 CH	09 CH	21 CH	35 CH	49 CH	91 CH
Main Dimmer						
White Intensity						
Flash Duration						
Strobe Speed White						
Strobe Speed RGB LED						
Color						
Red (All Sections)						
Green (All Sections)						
Blue (All Sections)						
Red (Separate Sections)						
Green (Separate Sections)						
Blue (Separate Sections)						
White (Separate Sections)						
Auto Program						
Auto Program Speed						

6.7.3. 03 CH (3 Channels), 09 CH (9 Channels)

Figure 24

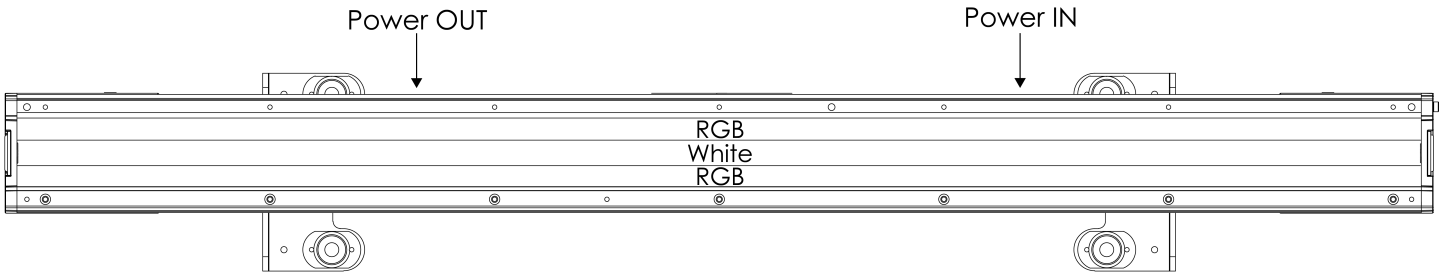

RGB AND WHITE LEDS

03 CH	09 CH	Function	Value	Setting
	1	**Main Dimmer**	000–255	From low to high intensity (0–100 %)
1	2	**White Intensity**	000–255	From low to high intensity (0–100 %)
2	3	**Flash Duration**	000–255	From short to long (0–100 %)
3	4	**Strobe Speed White**	000–005	No function
			006–060	Linear strobe speed (0–20 Hz)
			061–110	Ramp up (slow to fast)
			111–160	Ramp down (slow to fast)
			161–210	Random linear strobe (slow to fast)
			211–255	Random sectional (slow to fast)
	5	**Strobe Speed RGB LED**	000–005	No function
			006–060	Linear strobe speed (0–20 Hz)
			061–110	Ramp up (slow to fast)
			111–160	Ramp down (slow to fast)
			161–210	Random linear strobe (slow to fast)
			211–255	Random sectional (slow to fast)
	6	**Color**	000–255	Preset colors (see 6.7.8. Color Presets on page 47)
	7	**Red**	000–255	From low to high intensity (0–100 %)
	8	**Green**	000–255	From low to high intensity (0–100 %)
	9	**Blue**	000–255	From low to high intensity (0–100 %)

6.7.4. 21 CH (21 Channels)

Figure 25

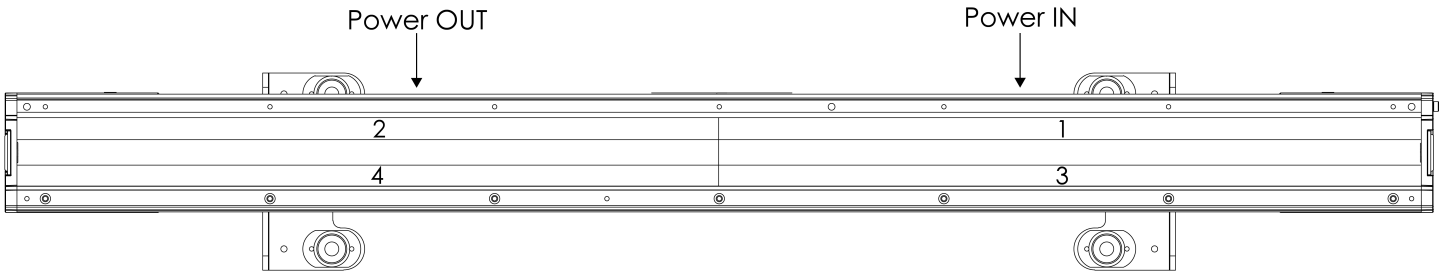

RGB SECTIONS

Figure 26

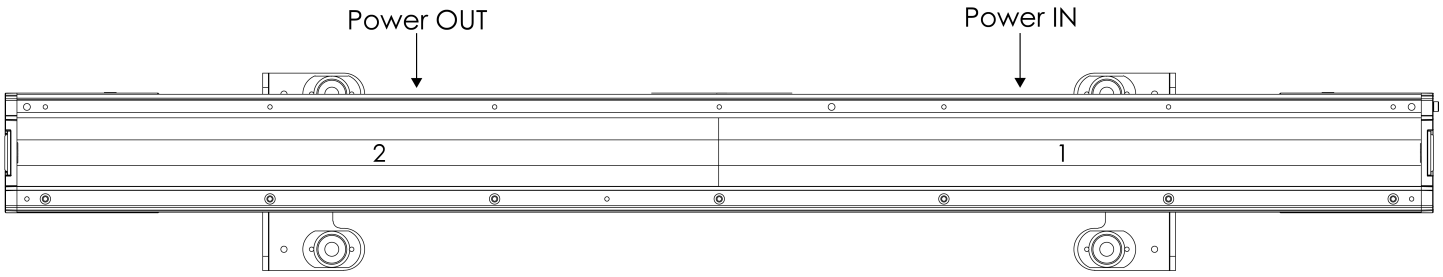

WHITE SECTIONS

21 CH	Function	Value	Setting
1	**Main Dimmer**	000–255	From low to high intensity (0–100 %)
2	**Flash Duration**	000–255	From short to long (0–100 %)
3	**Strobe Speed White**	000–005	No function
		006–060	Linear strobe speed (0–20 Hz)
		061–110	Ramp up (slow to fast)
		111–160	Ramp down (slow to fast)
		161–210	Random linear strobe (slow to fast)
		211–255	Random sectional (slow to fast)
4	**Strobe Speed RGB LED**	000–005	No function
		006–060	Linear strobe speed (0–20 Hz)
		061 -110	Ramp up (slow to fast)
		111–160	Ramp down (slow to fast)
		161–210	Random linear strobe (slow to fast)
		211–255	Random sectional (slow to fast)
5	**Color**	000–255	Preset colors (see 6.7.8. Color Presets on page 47)
6	**Red (Section 1 of 4)**	000–255	From low to high intensity (0–100 %)
7	**Green (Section 1 of 4)**	000–255	From low to high intensity (0–100 %)
8	**Blue (Section 1 of 4)**	000–255	From low to high intensity (0–100 %)
9	**Red (Section 2 of 4)**	000–255	From low to high intensity (0–100 %)
10	**Green (Section 2 of 4)**	000–255	From low to high intensity (0–100 %)
11	**Blue (Section 2 of 4)**	000–255	From low to high intensity (0–100 %)
12	**White (Section 1 of 2)**	000–255	From low to high intensity (0–100 %)
13	**White (Section 2 of 2)**	000–255	From low to high intensity (0–100 %)
14	**Red (Section 3 of 4)**	000–255	From low to high intensity (0–100 %)
15	**Green (Section 3 of 4)**	000–255	From low to high intensity (0–100 %)
16	**Blue (Section 3 of 4)**	000–255	From low to high intensity (0–100 %)
17	**Red (Section 4 of 4)**	000–255	From low to high intensity (0–100 %)
18	**Green (Section 4 of 4)**	000–255	From low to high intensity (0–100 %)
19	**Blue (Section 4 of 4)**	000–255	From low to high intensity (0–100 %)
20	**Auto Program**	000–255	Auto program (see 6.7.9. Auto Program on page 48)
21	**Auto Program Speed**	000–255	Program speed adjustment (1–10)

6.7.5. 35 CH (35 Channels)

Figure 27

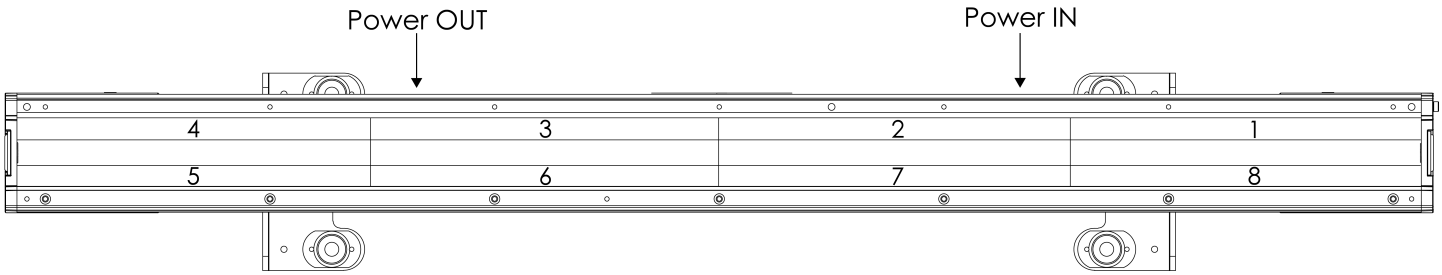

RGB SECTIONS

Figure 28

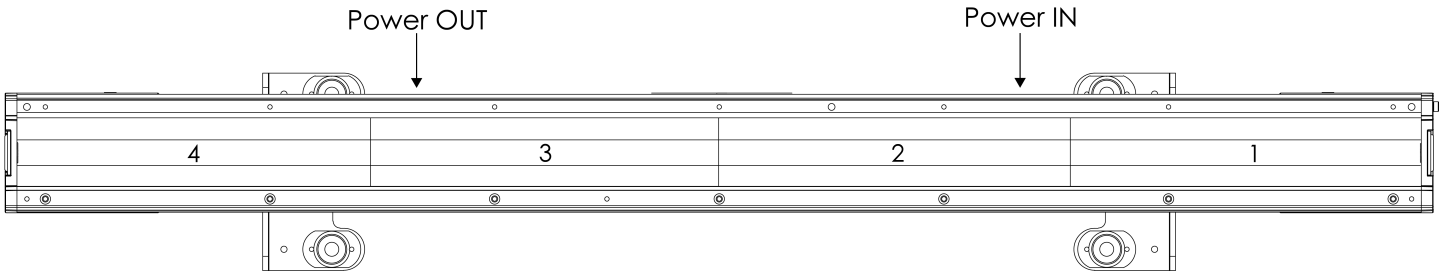

WHITE SECTIONS

35 CH	Function	Value	Setting
1	**Main Dimmer**	000–255	From low to high intensity (0–100 %)
2	**Flash Duration**	000–255	From short to long (0–100 %)
3	**Strobe Speed White**	000–005	No function
		006–060	Linear strobe speed (0–20 Hz)
		061–110	Ramp up (slow to fast)
		111–160	Ramp down (slow to fast)
		161–210	Random linear strobe (slow to fast)
		211–255	Random sectional (slow to fast)
4	**Strobe Speed RGB LED**	000–005	No function
		006–060	Linear strobe speed (0–20 Hz)
		061 -110	Ramp up (slow to fast)
		111–160	Ramp down (slow to fast)
		161–210	Random linear strobe (slow to fast)
		211–255	Random sectional (slow to fast)
5	**Color**	000–255	Preset colors (see 6.7.8. Color Presets on page 47)
6	**Red (Section 1 of 8)**	000–255	From low to high intensity (0–100 %)
7	**Green (Section 1 of 8)**	000–255	From low to high intensity (0–100 %)
8	**Blue (Section 1 of 8)**	000–255	From low to high intensity (0–100 %)
9	**Red (Section 2 of 8)**	000–255	From low to high intensity (0–100 %)
10	**Green (Section 2 of 8)**	000–255	From low to high intensity (0–100 %)
11	**Blue (Section 2 of 8)**	000–255	From low to high intensity (0–100 %)
12	**Red (Section 3 of 8)**	000–255	From low to high intensity (0–100 %)
13	**Green (Section 3 of 8)**	000–255	From low to high intensity (0–100 %)
14	**Blue (Section 3 of 8)**	000–255	From low to high intensity (0–100 %)
15	**Red (Section 4 of 8)**	000–255	From low to high intensity (0–100 %)
16	**Green (Section 4 of 8)**	000–255	From low to high intensity (0–100 %)
17	**Blue (Section 4 of 8)**	000–255	From low to high intensity (0–100 %)
18	**White (Section 1 of 4)**	000–255	From low to high intensity (0–100 %)

35 CH	Function	Value	Setting
19	**White (Section 2 of 4)**	000–255	From low to high intensity (0–100 %)
20	**White (Section 3 of 4)**	000–255	From low to high intensity (0–100 %)
21	**White (Section 4 of 4)**	000–255	From low to high intensity (0–100 %)
22	**Red (Section 5 of 8)**	000–255	From low to high intensity (0–100 %)
23	**Green (Section 5 of 8)**	000–255	From low to high intensity (0–100 %)
24	**Blue (Section 5 of 8)**	000–255	From low to high intensity (0–100 %)
25	**Red (Section 6 of 8)**	000–255	From low to high intensity (0–100 %)
26	**Green (Section 6 of 8)**	000–255	From low to high intensity (0–100 %)
27	**Blue (Section 6 of 8)**	000–255	From low to high intensity (0–100 %)
28	**Red (Section 7 of 8)**	000–255	From low to high intensity (0–100 %)
29	**Green (Section 7 of 8)**	000–255	From low to high intensity (0–100 %)
30	**Blue (Section 7 of 8)**	000–255	From low to high intensity (0–100 %)
31	**Red (Section 8 of 8)**	000–255	From low to high intensity (0–100 %)
32	**Green (Section 8 of 8)**	000–255	From low to high intensity (0–100 %)
33	**Blue (Section 8 of 8)**	000–255	From low to high intensity (0–100 %)
34	**Auto Program**	000–255	Auto program (see 6.7.9. Auto Program on page 48)
35	**Auto Program Speed**	000–255	Program speed adjustment (1–10)

6.7.6. 49 CH (49 Channels)

Figure 29

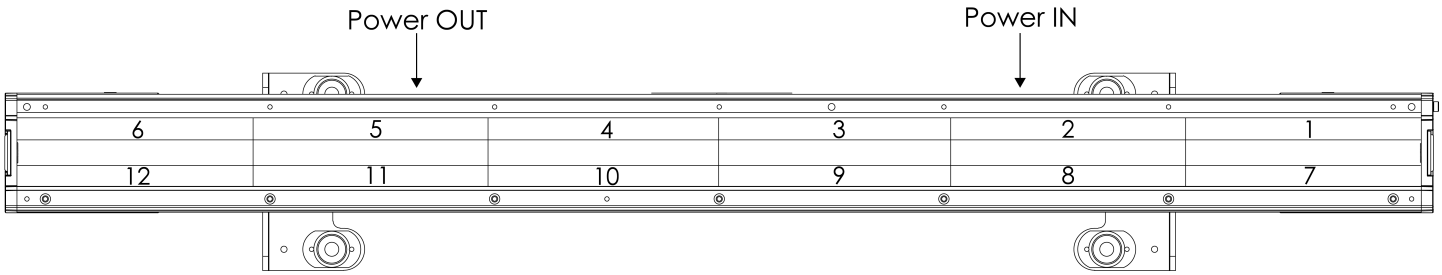

RGB SECTIONS

Figure 30

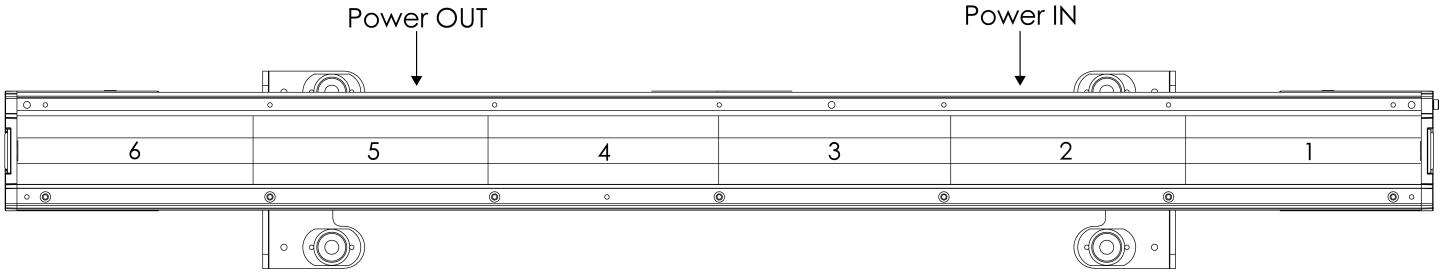

WHITE SECTIONS

49 CH	Function	Value	Setting
1	**Main Dimmer**	000–255	From low to high intensity (0–100 %)
2	**Flash Duration**	000–255	From short to long (0–10 0%)
3	**Strobe Speed White**	000–005	No function
		006–060	Linear strobe speed (0–20 Hz)
		061–110	Ramp up (slow to fast)
		111–160	Ramp down (slow to fast)
		161–210	Random linear strobe (slow to fast)
		211–255	Random sectional (slow to fast)
4	**Strobe Speed RGB LED**	000–005	No function
		006–060	Linear strobe speed (0–20 Hz)
		061 -110	Ramp up (slow to fast)
		111–160	Ramp down (slow to fast)
		161–210	Random linear strobe (slow to fast)
		211–255	Random sectional (slow to fast)
5	**Color**	000–255	Preset colors (see 6.7.8. Color Presets on page 47)
6	**Red (Section 1 of 12)**	000–255	From low to high intensity (0–100 %)
7	**Green (Section 1 of 12)**	000–255	From low to high intensity (0–100 %)
8	**Blue (Section 1 of 12)**	000–255	From low to high intensity (0–100 %)
9	**Red (Section 2 of 12)**	000–255	From low to high intensity (0–100 %)
10	**Green (Section 2 of 12)**	000–255	From low to high intensity (0–100 %)
11	**Blue (Section 2 of 12)**	000–255	From low to high intensity (0–100 %)
12	**Red (Section 3 of 12)**	000–255	From low to high intensity (0–100 %)
13	**Green (Section 3 of 12)**	000–255	From low to high intensity (0–100 %)
14	**Blue (Section 3 of 12)**	000–255	From low to high intensity (0–100 %)
15	**Red (Section 4 of 12)**	000–255	From low to high intensity (0–100 %)
16	**Green (Section 4 of 12)**	000–255	From low to high intensity (0–100 %)
17	**Blue (Section 4 of 12)**	000–255	From low to high intensity (0–100 %)
18	**Red (Section 5 of 12)**	000–255	From low to high intensity (0–100 %)

49 CH	Function	Value	Setting
19	**Green (Section 5 of 12)**	000–255	From low to high intensity (0–100 %)
20	**Blue (Section 5 of 12)**	000–255	From low to high intensity (0–100 %)
21	**Red (Section 6 of 12)**	000–255	From low to high intensity (0–100 %)
22	**Green (Section 6 of 12)**	000–255	From low to high intensity (0–100 %)
23	**Blue (Section 6 of 12)**	000–255	From low to high intensity (0–100 %)
24	**White (Section 1 of 6)**	000–255	From low to high intensity (0–100 %)
25	**White (Section 2 of 6)**	000–255	From low to high intensity (0–100 %)
26	**White (Section 3 of 6)**	000–255	From low to high intensity (0–100 %)
27	**White (Section 4 of 6)**	000–255	From low to high intensity (0–100 %)
28	**White (Section 5 of 6)**	000–255	From low to high intensity (0–100 %)
29	**White (Section 6 of 6)**	000–255	From low to high intensity (0–100 %)
30	**Red (Section 7 of 12)**	000–255	From low to high intensity (0–100 %)
31	**Green (Section 7 of 12)**	000–255	From low to high intensity (0–100 %)
32	**Blue (Section 7 of 12)**	000–255	From low to high intensity (0–100 %)
33	**Red (Section 8 of 12)**	000–255	From low to high intensity (0–100 %)
34	**Green (Section 8 of 12)**	000–255	From low to high intensity (0–100 %)
35	**Blue (Section 8 of 12)**	000–255	From low to high intensity (0–100 %)
36	**Red (Section 9 of 12)**	000–255	From low to high intensity (0–100 %)
37	**Green (Section 9 of 12)**	000–255	From low to high intensity (0–100 %)
38	**Blue (Section 9 of 12)**	000–255	From low to high intensity (0–100 %)
39	**Red (Section 10 of 12)**	000–255	From low to high intensity (0–100 %)
40	**Green (Section 10 of 12)**	000–255	From low to high intensity (0–100 %)
41	**Blue (Section 10 of 12)**	000–255	From low to high intensity (0–100 %)
42	**Red (Section 11 of 12)**	000–255	From low to high intensity (0–100 %)
43	**Green (Section 11 of 12)**	000–255	From low to high intensity (0–100 %)
44	**Blue (Section 11 of 12)**	000–255	From low to high intensity (0–100 %)
45	**Red (Section 12 of 12)**	000–255	From low to high intensity (0–100 %)
46	**Green (Section 12 of 12)**	000–255	From low to high intensity (0–100 %)
47	**Blue (Section 12 of 12)**	000–255	From low to high intensity (0–100 %)
48	**Auto Program**	000–255	Auto program (see 6.7.9. Auto Program on page 48)
49	**Auto Program Speed**	000–255	Program speed adjustment (1–10)

6.7.7. 91 CH (91 Channels)

Figure 31

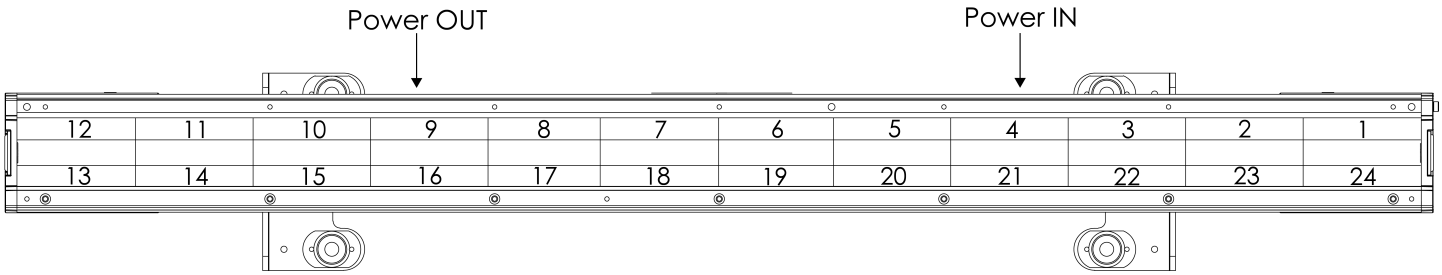

RGB SECTIONS

Figure 32

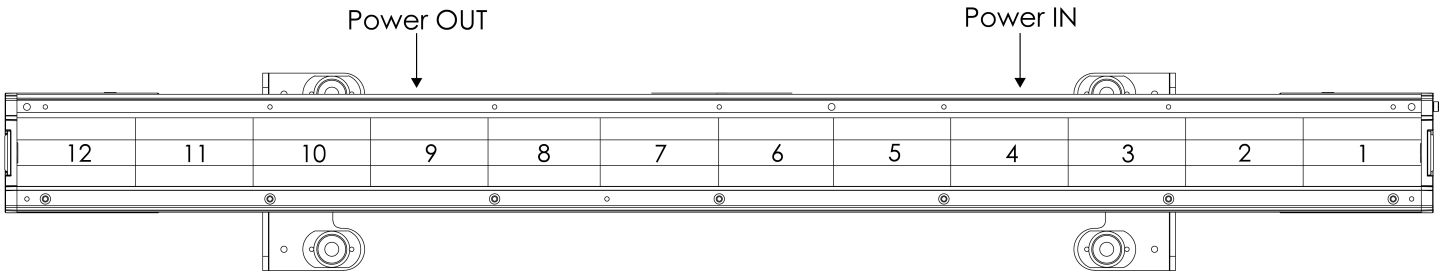

WHITE SECTIONS

91 CH	Function	Value	Setting
1	**Main Dimmer**	000–255	From low to high intensity (0–100 %)
2	**Flash Duration**	000–255	From short to long (0–100 %)
3	**Strobe Speed White**	000–005	No function
		006–060	Linear strobe speed (0–20 Hz)
		061–110	Ramp up (slow to fast)
		111–160	Ramp down (slow to fast)
		161–210	Random linear strobe (slow to fast)
		211–255	Random sectional (slow to fast)
4	**Strobe Speed RGB LED**	000–005	No function
		006–060	Linear strobe speed (0–20 Hz)
		061 -110	Ramp up (slow to fast)
		111–160	Ramp down (slow to fast)
		161–210	Random linear strobe (slow to fast)
		211–255	Random sectional (slow to fast)
5	**Color**	000–255	Preset colors (see 6.7.8. Color Presets on page 47)
6	**Red (Section 1 of 24)**	000–255	From low to high intensity (0–100 %)
7	**Green (Section 1 of 24)**	000–255	From low to high intensity (0–100 %)
8	**Blue (Section 1 of 24)**	000–255	From low to high intensity (0–100 %)
9	**Red (Section 2 of 24)**	000–255	From low to high intensity (0–100 %)
10	**Green (Section 2 of 24)**	000–255	From low to high intensity (0–100 %)
11	**Blue (Section 2 of 24)**	000–255	From low to high intensity (0–100 %)
12	**Red (Section 3 of 24)**	000–255	From low to high intensity (0–100 %)
13	**Green (Section 3 of 24)**	000–255	From low to high intensity (0–100 %)
14	**Blue (Section 3 of 24)**	000–255	From low to high intensity (0–100 %)
15	**Red (Section 4 of 24)**	000–255	From low to high intensity (0–100 %)
16	**Green (Section 4 of 24)**	000–255	From low to high intensity (0–100 %)
17	**Blue (Section 4 of 24)**	000–255	From low to high intensity (0–100 %)
18	**Red (Section 5 of 24)**	000–255	From low to high intensity (0–100 %)

91 CH	Function	Value	Setting
19	Green (Section 5 of 24)	000–255	From low to high intensity (0–100 %)
20	Blue (Section 5 of 24)	000–255	From low to high intensity (0–100 %)
21	Red (Section 6 of 24)	000–255	From low to high intensity (0–100 %)
22	Green (Section 6 of 24)	000–255	From low to high intensity (0–100 %)
23	Blue (Section 6 of 24)	000–255	From low to high intensity (0–100 %)
24	Red (Section 7 of 24)	000–255	From low to high intensity (0–100 %)
25	Green (Section 7 of 24)	000–255	From low to high intensity (0–100 %)
26	Blue (Section 7 of 24)	000–255	From low to high intensity (0–100 %)
27	Red (Section 8 of 24)	000–255	From low to high intensity (0–100 %)
28	Green (Section 8 of 24)	000–255	From low to high intensity (0–100 %)
29	Blue (Section 8 of 24)	000–255	From low to high intensity (0–100 %)
30	Red (Section 9 of 24)	000–255	From low to high intensity (0–100 %)
31	Green (Section 9 of 24)	000–255	From low to high intensity (0–100 %)
32	Blue (Section 9 of 24)	000–255	From low to high intensity (0–100 %)
33	Red (Section 10 of 24)	000–255	From low to high intensity (0–100 %)
34	Green (Section 10 of 24)	000–255	From low to high intensity (0–100 %)
35	Blue (Section 10 of 24)	000–255	From low to high intensity (0–100 %)
36	Red (Section 11 of 24)	000–255	From low to high intensity (0–100 %)
37	Green (Section 11 of 24)	000–255	From low to high intensity (0–100 %)
38	Blue (Section 11 of 24)	000–255	From low to high intensity (0–100 %)
39	Red (Section 12 of 24)	000–255	From low to high intensity (0–100 %)
40	Green (Section 12 of 24)	000–255	From low to high intensity (0–100 %)
41	Blue (Section 12 of 24)	000–255	From low to high intensity (0–100 %)
42	White (Section 1 of 12)	000–255	From low to high intensity (0–100 %)
43	White (Section 2 of 12)	000–255	From low to high intensity (0–100 %)
44	White (Section 3 of 12)	000–255	From low to high intensity (0–100 %)
45	White (Section 4 of 12)	000–255	From low to high intensity (0–100 %)
46	White (Section 5 of 12)	000–255	From low to high intensity (0–100 %)
47	White (Section 6 of 12)	000–255	From low to high intensity (0–100 %)
48	White (Section 7 of 12)	000–255	From low to high intensity (0–100 %)
49	White (Section 8 of 12)	000–255	From low to high intensity (0–100 %)
50	White (Section 9 of 12)	000–255	From low to high intensity (0–100 %)
51	White (Section 10 of 12)	000–255	From low to high intensity (0–100 %)
52	White (Section 11 of 12)	000–255	From low to high intensity (0–100 %)
53	White (Section 12 of 12)	000–255	From low to high intensity (0–100 %)
54	Red (Section 13 of 24)	000–255	From low to high intensity (0–100 %)
55	Green (Section 13 of 24)	000–255	From low to high intensity (0–100 %)
56	Blue (Section 13 of 24)	000–255	From low to high intensity (0–100 %)
57	Red (Section 14 of 24)	000–255	From low to high intensity (0–100 %)
58	Green (Section 14 of 24)	000–255	From low to high intensity (0–100 %)
59	Blue (Section 14 of 24)	000–255	From low to high intensity (0–100 %)
60	Red (Section 15 of 24)	000–255	From low to high intensity (0–100 %)
61	Green (Section 15 of 24)	000–255	From low to high intensity (0–100 %)
62	Blue (Section 15 of 24)	000–255	From low to high intensity (0–100 %)
63	Red (Section 16 of 24)	000–255	From low to high intensity (0–100 %)
64	Green (Section 16 of 24)	000–255	From low to high intensity (0–100 %)
65	Blue (Section 16 of 24)	000–255	From low to high intensity (0–100 %)
66	Red (Section 17 of 24)	000–255	From low to high intensity (0–100 %)
67	Green (Section 17 of 24	000–255	From low to high intensity (0–100 %)

91 CH	Function	Value	Setting
68	Blue (Section 17 of 24	000–255	From low to high intensity (0–100 %)
69	Red (Section 18 of 24)	000–255	From low to high intensity (0–100 %)
70	Green (Section 18 of 24)	000–255	From low to high intensity (0–100 %)
71	Blue (Section 18 of 24)	000–255	From low to high intensity (0–100 %)
72	Red (Section 19 of 24)	000–255	From low to high intensity (0–100 %)
73	Green (Section 19 of 24)	000–255	From low to high intensity (0–100 %)
74	Blue (Section 19 of 24)	000–255	From low to high intensity (0–100 %)
75	Red (Section 20 of 24)	000–255	From low to high intensity (0–100 %)
76	Green (Section 20 of 24)	000–255	From low to high intensity (0–100 %)
77	Blue (Section 20 of 24)	000–255	From low to high intensity (0–100 %)
78	Red (Section 21 of 24)	000–255	From low to high intensity (0–100 %)
79	Green (Section 21 of 24)	000–255	From low to high intensity (0–100 %)
80	Blue (Section 21 of 24)	000–255	From low to high intensity (0–100 %)
81	Red (Section 22 of 24)	000–255	From low to high intensity (0–100 %)
82	Green (Section 22 of 24)	000–255	From low to high intensity (0–100 %)
83	Blue (Section 22 of 24)	000–255	From low to high intensity (0–100 %)
84	Red (Section 23 of 24)	000–255	From low to high intensity (0–100 %)
85	Green (Section 23 of 24)	000–255	From low to high intensity (0–100 %)
86	Blue (Section 23 of 24)	000–255	From low to high intensity (0–100 %)
87	Red (Section 24 of 24)	000–255	From low to high intensity (0–100 %)
88	Green (Section 24 of 24)	000–255	From low to high intensity (0–100 %)
89	Blue (Section 24 of 24)	000–255	From low to high intensity (0–100 %)
90	Auto Program	000–255	Auto program (see 6.7.9. Auto Program on page 48)
91	Auto Program Speed	000–255	Program speed adjustment (1–10)

6.7.8. Color Presets

Function	Value
No Function	000–004
Color 1	005–009
Color 2	010–014
Color 3	015–019
Color 4	020–024
Color 5	025–029
Color 6	030–034
Color 7	035–039
Color 8	040–044
Color 9	045–049
Color 10	050–054
Color 11	055–059
Color 12	060–064
Color 13	065–069
Color 14	070–074
Color 15	075–079
Color 16	080–084
Color 17	085–089
Color 18	090–094
Color 19	095–099

Function	Value
Color 20	100–104
Color 21	105–109
Color 22	110–114
Color 23	115–119
Color 24	120–124
Color 25	125–129
Color 26	130–134
Color 27	135–139
Color 28	140–144
Color 29	145–149
Color 30	150–154
Color 31	155–159
Color 32	160–164
Color 33	165–169
Color 34	170–174
Color 35	175–179
Color 36	180–184
Color 37	185–189
Color 38	190–194
Color 39	195–199
Color 40	200–204
Color 41	205–209
Color 42	210–214
Color 43	215–219
Color 44	220–224
Color 45	225–229
Color 46	230–234
Color 47	235–239
Color 48	240–244
Color 49	245–249
Color 50	250–254
Color 51	255

6.7.9. Auto Program

Function	Value
No Function	000–007
Auto 1	008–015
Auto 2	016–023
Auto 3	024–031
Auto 4	032–039
Auto 5	040–047
Auto 6	048–055
Auto 7	056–063
Auto 8	064–071
Auto 9	072–079
Auto 10	080–087

Function	Value
Auto 11	088–095
Auto 12	096–103
Auto 13	104–111
Auto 14	112–119
Auto 15	120–127
Auto 16	128–135
Auto 17	136–143
Auto 18	144–151
Auto 19	152–159
Auto 20	160–167
Auto 21	168–175
Auto 22	176–183
Auto 23	184–191
Auto 24	192–199
Auto 25	200–207
Auto 26	208–215
Auto 27	216–223
Auto 28	224–231
Auto 29	232–239
Auto 30	240–247
Auto 31	248–255

6.8. RDM Information

This device supports RDM (see 6.8.2. Supported RDM PIDs (Parameter IDs)).

6.8.1. RDM Details

- Responder ID: 29B4:0EExxxxx
- Manufacturer's ID: Showtec (Highlite International B.V.)
- Manufacturer Label: Showtec
- Model Description: Spectra Strobe
- Model ID: 238 (0EE hexadecimal)
- Device Label: Spectra Strobe

Note:

An RDM responder ID consists of 3 parts:

- 1st part – 4 digits – Manufacturer's ID
- 2nd part – 3 digits – Model ID
- 3rd part – 5 digits – Unique ID

The RDM responder IDs of all products of Highlite International start with the same 4 digits. The first 7 digits of the RDM responder ID for each model are the same. The last 5 digits are different for each device.

6.8.2. Supported RDM PIDs (Parameter IDs)

RDM Parameter ID	Value	Required	GET	SET
DEVICE_HOURS	0x0400		*	*
DEVICE_LABEL	0x0082		*	*
DEVICE_MODEL_DESCRIPTION	0x0080		*	
DMX_PERSONALITY	0x00E0	*	*	*
DMX_PERSONALITY_DESCRIPTION	0x00E1		*	
DMX_START_ADDRESS	0x00F0		*	*
FACTORY_DEFAULTS	0x0090		*	*
MANUFACTURER_LABEL	0x0081	*	*	
PARAMETER_DESCRIPTION	0x0051		*	
SENSOR_DEFINITION	0x0200		*	
SENSOR_VALUE	0x0201	*	*	
SUPPORTED_PARAMETERS	0x0050	*	*	

7. Troubleshooting

This troubleshooting guide contains solutions to problems which can be carried out by an ordinary person. The device does not contain user-serviceable parts.

Unauthorized modifications to the device will render the warranty void. Such modifications may result in injuries and material damage.

Refer servicing to instructed or skilled persons. Contact your Highlite International dealer in case the solution is not described in the table.

Problem	Probable cause(s)	Solution
The device does not function at all	No power to the device	• Make sure that the device is connected to power supply
	The LEDs are defective	• Contact your Showtec dealer
The device responds erratically	The factory settings of the device are changed	• Reset the parameters of the device to the default factory settings
The device does not respond to DMX control	The controller is not connected	• Check if the fixture is connected to the controller
	The signal is reversed. The 5-pin DMX Out of the controller does not match the DMX In of the device	• Install a phase-reversing cable between the controller and the device
	The controller is defective	• Try using another controller
The device responds erratically to DMX control	Connections are defective	• Examine connections and cables. Correct defective connections. Repair or replace damaged cables
	The data link is not terminated with a 120 Ω termination plug	• Insert a termination plug in the DMX OUT connector of the last device on the link
	Incorrect addressing	• Make sure that the address settings are correct
	In case of a setup with multiple devices, one of the devices is defective and disturbs data transmission on the link	• To find out the defective device, bypass one device at a time until normal operation is restored
No lights or LEDs cut out intermittently	The LEDs are defective	• Disconnect the device and contact your Showtec dealer
	The input power parameters of the device do not match local AC voltage frequency	• Disconnect the device. Make sure that the local current, voltage and frequency match the input voltage, current and frequency specified on the information label on the device

8. Maintenance

8.1. Safety Instructions for Maintenance



DANGER
Electric shock caused by dangerous voltage inside

Disconnect power supply before servicing or cleaning.

8.2. Preventive Maintenance



Attention
Before each use, examine the device visually for any defects.

Make sure that:

- All screws used for installing the device or parts of the device are tightly fastened and are not corroded.
- There are no deformations on housings, fixings and installation points.
- The power cables are not damaged and do not show any material fatigue.

8.2.1. Basic Cleaning Instructions

The external lens of the device must be cleaned periodically in order to optimize the light output. The cleaning schedule depends on the conditions at the site where the device is installed. When smoke or fog machines are used at the site, the device will need more frequent cleaning. On the other hand, if the device is installed in well-ventilated area, it will need less frequent cleaning. To establish a cleaning schedule, examine the device at regular intervals during the first 100 hours of operation.

To clean the device, follow the steps below:

01) Disconnect the device from the electrical power supply.
02) Allow the device to cool down for at least 15 minutes.
03) Remove the dust collected on the external surface with dry compressed air and a soft brush.
04) Clean the lens with a damp cloth. Use a mild detergent solution.
05) Dry the lens carefully with a lint-free cloth.
06) Clean the DMX and other connections with a damp cloth.



Attention

- Do not immerse the device in liquid.
- Do not use alcohol or solvents.

Make sure that the connections are fully dry before connecting the device to the power supply and to other devices.

8.3. Corrective Maintenance

The device does not contain user-serviceable parts. Do not open the device and do not modify the device.

Refer repairs and servicing to instructed or skilled persons. Contact your Highlite International dealer for more information.

8.3.1. Replacing the Fuse

DANGER
Electric shock caused by short-circuit

- Do not bypass the thermostatic switch or fuses.
- Replace fuses only with the same type and rating.

Power surges, short-circuit or incorrect electrical power supply may cause a fuse to burn out. If the fuse burns out, the device will not function anymore. If this happens, follow the steps below:

01) Disconnect the device from the electrical power supply.
02) Allow the device to cool down for at least 15 minutes.
03) Loosen the fuse cover with a screwdriver and remove the fuse holder.
04) If the fuse is brown or unclear, it is burned out. Remove the old fuse.
05) Insert a new fuse in the fuse holder. Make sure that the type and the rating of the replacement fuse are the same as the ones specified on the information label of the product.
06) Replace the fuse holder in the opening and tighten the fuse cover.

8.3.2. Draining Condensation Water

The Spectra Strobe is IP65 rated. The device can resist water jets. If the device is exposed to extreme humid conditions during use, condensation may collect inside the device. This can happen also during transportation, if the device is exposed to extreme temperature variations.

If condensation water collects inside the device, follow the steps below to remove the condensation water:

01) Carefully remove the **protective vent (13)** with a wrench (16 mm).
02) Let the device operate with the lamp at full output for 60 minutes.
03) Let the device cool down for 30 minutes.
04) Reinstall the **protective vent (13)**. Make sure that you do not overtighten.

Figure 33

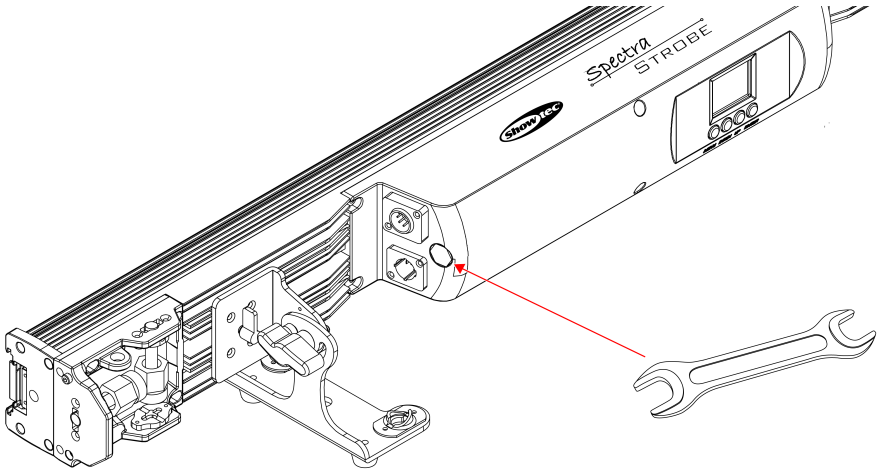

9. Deinstallation, Transportation and Storage

9.1. Instructions for Deinstallation

WARNING
Incorrect deinstallation can cause serious injuries and damage of property.

- Let the device cool down before dismounting.
- Disconnect power supply before deinstallation.
- Always observe the national and site-specific regulations during deinstallation and derigging of the device.
- Wear personal protective equipment in compliance with the national and site-specific regulations.

9.2. Instructions for Transportation

- Use the original packaging to transport the device, if possible.
- Always observe the handling instructions printed on the outer carton box, for example: "Handle with care", "This side up", "Fragile".

9.3. Storage

- Clean the device before storing (see 8.2.1. Basic Cleaning Instructions on page 52).
- Store the device in the original packaging, if possible.

10. Disposal



Correct disposal of this product

Waste Electrical and Electronic Equipment

This symbol on the product, its packaging or documents indicates that the product shall not be treated as household waste. Dispose of this product by handing it to the respective collection point for recycling of electrical and electronic equipment. This is to avoid environmental damage or personal injury due to uncontrolled waste disposal. For more detailed information about recycling of this product contact the local authorities or the authorized dealer.

11. Approval

CE

Check the respective product page on the website of Highlite International (www.highlite.com) for an available declaration of conformity.